इंटरनेट मानक

Disclosure to Promote the Right To Information

Whereas the Parliament of India has set out to provide a practical regime of right to information for citizens to secure access to information under the control of public authorities, in order to promote transparency and accountability in the working of every public authority, and whereas the attached publication of the Bureau of Indian Standards is of particular interest to the public, particularly disadvantaged communities and those engaged in the pursuit of education and knowledge, the attached public safety standard is made available to promote the timely dissemination of this information in an accurate manner to the public.

"जानने का अधिकार, जीने का अधिकार"
Mazdoor Kisan Shakti Sangathan
"The Right to Information, The Right to Live"

"पुराने को छोड नये के तरफ"
Jawaharlal Nehru
"Step Out From the Old to the New"

IS 2071-1 (1993): High voltage test techniques, Part 1: General definitions and test requirements [ETD 19: High Voltage Engineering]

"ज्ञान से एक नये भारत का निर्माण"
Satyanarayan Gangaram Pitroda
"Invent a New India Using Knowledge"

RIGHT TO INFORMATION

Made Available By Public.Resource.Org

"ज्ञान एक ऐसा खजाना है जो कभी चुराया नहीं जा सकता है"
Bhartṛhari—Nītiśatakam
"Knowledge is such a treasure which cannot be stolen"

BLANK PAGE

BRUTUM FULMEN

IGNORANTIA JURIS NON EXCUSAT

PROTECTED BY COPYRIGHT

IS 2071 (Part 1) : 1993
IEC Pub 60-1 (1989)

(Reaffirmed 2004)

भारतीय मानक

उच्च वोल्टता परीक्षण तकनीकें

भाग 1 सामान्य परिभाषाएं और परीक्षण अपेक्षाएं

(दूसरा पुनरीक्षण)

Indian Standard

HIGH VOLTAGE TEST TECHNIQUES

PART 1 GENERAL DEFINITIONS AND TEST REQUIREMENTS

(Second Revision)

First Reprint NOVEMBER 1996

UDC 621·317·32·027·3

© BIS 1993

BUREAU OF INDIAN STANDARDS
MANAK BHAVAN, 9 BAHADUR SHAH ZAFAR MARG
NEW DELHI 110002

October 1993 Price *Rs.* 220.00

CONTENTS

Page

National Foreword 1

Section 1: General 3

1 Scope 3

2 Object 3

Section 2: General Definitions 4

3 Impulses 4
3.1 Lightning and switching impulses 4

4 Characteristics related to disruptive discharge and test voltages 4
4.1 Disruptive discharge 4
4.2 Characteristics of the test voltage 5
4.3 Disruptive discharge voltage of a test object 5
4.4 Statistical characteristics of disruptive discharge voltages 5
4.5 Withstand voltage of a test object 6
4.6 Assured disruptive discharge voltage of a test object 6

5 Classification of insulation in test objects 6
5.1 External insulation 6
5.2 Internal insulation 7
5.3 Self-restoring insulation 7
5.4 Non-self-restoring insulation 7

Section 3: General Requirements Relating to Test Procedures and Test Objects 8

6 General requirements for test procedures 8

7 General arrangement of the test object 8

8 Dry tests 9

9 Wet tests 9
9.1 Standard wet test procedure 9
9.2 Traditional procedures for wet tests with alternating voltages 11

10 Artificial pollution tests 11
10.1 Preparation of test object 12
10.2 Test procedures 12
10.3 Degree of pollution 13

11 Atmospheric conditions 14
11.1 Standard reference atmosphere 14
11.2 Atmospheric correction factors 14
11.3 Wet tests, tests under artificial pollution and combined tests 15
11.4 Conflicting requirements for testing internal and external insulation 16
11.5 Measurement of humidity 16

Section 4: Tests with Direct Voltage 17

12 Definitions for direct voltage tests 17
12.1 Value of the test voltage 17
12.2 Ripple 17

13 Test voltage 17
13.1 Requirements for the test voltage 17
13.2 Generation of the test voltage 17
13.3 Measurement of the test voltage 18
13.4 Measurement of the test current 19

14 Test procedures 19
14.1 Withstand voltage tests 19
14.2 Disruptive discharge voltage tests 20
14.3 Assured disruptive discharge voltage tests 20

Section 5: Tests with Alternating Voltage 21

15 Definitions for alternating voltage tests 21
15.1 Definitions for alternating voltage tests 21
15.2 Peak value 21
15.3 R.M.S. value 21

16 Test Voltage 21
16.1 Requirements for the test voltage 21
16.2 Generation of the test voltage 22
16.3 Measurement of the test voltage 23

17 Test procedures 24
17.1 Withstand voltage tests 24
17.2 Disruptive discharge voltage tests 24
17.3 Assured disruptive discharge voltage tests 25

Section 6: Tests with Lightning Impulse Voltage 26

18 Definitions for lightning impulse tests 26
18.1 Definitions of general applicability 26
18.2 Definitions applicable only to chopped impulses 27
18.3 Voltage/time curves 28

19 Test Voltage 28
19.1 Standard lightning impulse 28
19.2 Tolerances 28
19.3 Standard chopped lightning impulse 29
19.4 Special lightning impulses 29
19.5 Generation of the test voltage 29
19.6 Measurement of the test voltage and determination of impulse shape 29
19.7 Measurement of current during tests with impulse voltages 30

20 Test Procedures 30
20.1 Withstand voltage tests 30
20.2 Procedures for assured discharge voltage tests 32

Section 7: Tests with Switching Impulses 33

21 Definitions for switching impulse tests 33
21.1 Switching impulse 33
21.2 Value of the test voltage 33
21.3 Time to peak T_p 33
21.4 Time to half-value T_2 33
21.5 Time above 90% T_d 33
21.6 Time to zero T_0 33
21.7 Time to chopping T_c 34
21.8 Linearly rising impulse 34

22 Test voltage 34
22.1 Standard switching impulse 34
22.2 Tolerances 34
22.3 Special switching impulses 34
22.4 Generation of the test voltage 35
22.5 Measurement of test voltage and determination of impulse shape 35

23 Test procedures 35

Section 8: Tests with Impulse Current 36

24 Definitions for impulse current tests 36
24.1 Impulse current 36
24.2 Value of the test current 36
24.3 Front time T_1 36
24.4 Virtual origin O_1 36
24.5 Time to half-value T_2 36
24.6 Duration of peak of a rectangular impulse current T_d 36
24.7 Total duration of a rectangular impulse current T_t 37

25 Test current . . . 37
25.1 Standard impulse currents . . . 37
25.2 Tolerances . . . 37
25.3 Measurement of the test current . . . 38
25.4 Measurement of voltage during tests with impulse current . . . 38

Section 9: Combined and Composite Tests . . . 39

26 Combined voltage tests . . . 39
26.1 Value of the test voltage U . . . 39
26.2 Time delay Δt . . . 39
26.3 Actual voltage shapes . . . 39
26.4 Arrangement of the test object . . . 40
26.5 Atmospheric correction factors . . . 40

27 Composite tests . . . 40

Appendix A: Statistical Treatment of Test Results . . . 41

A.1 Classification of tests . . . 41
A.1.1 Class 1: Multiple-level tests . . . 41
A.1.2 Class 2: Up-and-down tests . . . 41
A.1.3 Class 3: Successive Discharge Tests . . . 41

A.2 Statistical Behaviour of Disruptive Discharge . . . 42
A.2.1 Confidence limits and statistical error . . . 42

A.3 Analysis of Test Results . . . 43
A.3.1 Treatment of Results from Class 1 Tests . . . 43
A.3.2 Treatment of Results from Class 2 Tests . . . 44
A.3.3 Treatment of Results from Class 3 Tests . . . 44

A.4 Application of likelihood methods . . . 45
A.4.1 The likelihood function . . . 45
A.4.2 Estimation of U_{50} and z . . . 46

Appendix B: Pollution Test Procedures . . . 47

B.1 Production of salt fog . . . 47
B.1.1 Preparation of salt solution . . . 47
B.1.2 Details of spraying system . . . 47

B.2 Pre-deposition of pollution, coating and wetting procedure . . . 47
B.2.1 Preparation of coating material . . . 47
B.2.2 Main characteristics of the inert materials . . . 48
B.2.3 Solid coating and wetting procedure . . . 48

B.3 Measurement of the degree of pollution . . . 49
B.3.1 Surface conductivity of the insulating surface . . . 49

B.3.2 Equivalent amount of sodium chloride per square centimetre of the insulating surface (S.D.D. mg/cm2) 49

Appendix C: Calibration of a Non-Approved Measurement Device with a Rod/Rod Gap 51

C.1 General arrangement of a rod/rod gap 51

C.2 Reference Values 51

C.3 Calibration Procedure 51

Figures 52

National Annex 71

Indian Standard

HIGH VOLTAGE TEST TECHNIQUES

PART 1 GENERAL DEFINITIONS AND TEST REQUIREMENTS

(Second Revision)

NATIONAL FOREWORD

This Indian Standard which is identical with IEC 60-1 : 1989 'High-voltage test techniques — Part 1 : General definitions and test requirements', issued by the International Electrotechnical Commission (IEC) was adopted by the Bureau of Indian Standards on the recommendation of the High Voltage Engineering Sectional Committee (ETD 19) and approved by the Electrotechnical Division Council.

With a large number of high voltage and extra high voltage transmission system being constructed in this country, expensive electrical equipments are being put to service. It is necessary to ensure that such equipments are capable to withstand the overvoltage normally encountered in service. This standard is intended to provide uniform methods of high voltage testing of electrical equipments.

First Indian Standard on this subject IS 2070 was published in 1962 but it only covered method of impulse voltage testing. Subsequently IS 2071 series was brought out in the year 1974 which covered test procedure for dielectric tests with dc, ac and impulse voltages and impulse currents.

This revision has been brought out to make it update and align it with the corresponding IEC publication. This standard covers test requirements as well as test procedures.

With the publication of this standard IS 2071 (Part 2) : 1974 will be withdrawn, because test procedures are also covered in Part 1 itself. A separate standard on measuring systems is under preparation and would replace IS 2071 (Part 3) : 1976.

The text of the IEC standard has been approved as suitable for publication as Indian Standard without deviations. Certain conventions are however not identical to those used in Indian Standards. Attention is particularly drawn to the following:

a) Wherever the words 'International Standard' appear referring to this standard, they should be read as 'Indian Standard'.

b) Comma (,) has been used as a decimal marker, while in Indian Standards, the current practice is to use a point (.) as the decimal marker.

CROSS REFERENCES

In this Indian Standard, the following International Standards are referred to. Read in their respective place the following:

International Standard	*Indian Standard*	*Degree of Correspondence*
IEC 52 : 1960 Recommendations for voltage measurement by means of sphere-gaps (one sphere earthed)	IS 1876 : 1961 Method for voltage measurement by means of sphere gaps (one sphere earthed)	Equivalent
IEC 60-3 : 1976 High voltage test techniques — Part 3 : Measuring devices	IS 2071 (Part 3) : 1976 Methods of high voltage testing : Part 3 Measuring devices	Equivalent
IEC 60-4 : 1977 High voltage test techniques — Part 4 : Application guide for measuring devices	IS 8690 : 1977 Application guide for measuring devices for high voltage testing	Equivalent

International Standard	*Indian Standard*	*Degree of Correspondence*
IEC 270 : 1981 Partial discharge measurements	IS 6209 : 1982 Method for partial discharge measurement (*first revision*)	Equivalent
IEC 507 : 1975 Artificial pollution tests on high-voltage insulators to be used on ac systems	IS 8704 : 1982 Methods for artificial pollution tests on high voltage insulators for use on ac systems	Equivalent

Technical Committee has also taken note of the mistake in Fig. 1 and confirmed that in place of Figure 1 given in main text, Figure 1 given in National Annex is to be followed. This is an obvious error and IEC/TC 42 had also taken a decision similar in line and an amendment to IEC 60-1 is expected soon.

Only English language text in the International Standard had been retained while adopting it in this Indian Standard.

1 Scope

This standard is applicable to:

— dielectric tests with direct voltage;

— dielectric tests with alternating voltage;

— dielectric tests with impulse voltage;

— tests with impulse current;

— tests with combinations of the above.

This standard is applicable only to tests on equipment having its highest voltage for equipment U_m above 1 kV.

This standard is not intended to be used for electromagnetic compatibility tests on electric or electronic equipment.

2 Object

The object of this standard is:

— to define terms of both general and specific applicability;

— to present general requirements regarding test objects and test procedures;

— to describe methods for generation and measurement of test voltages and currents;

— to describe test procedures;

— to describe methods for the evaluation of test results and to indicate criteria for acceptance or refusal.

Definitions and requirements concerning approved measuring devices and checking methods are given in IEC Publication 60-3: High Voltage Test Techniques — Measuring Devices.

Alternative test procedures may be required to obtain reproducible and significant results. The choice of a suitable test procedure should be made by the relevant Technical Committee.

Section 2: General Definitions

3 Impulses

An impulse is an intentionally applied aperiodic transient voltage or current which usually rises rapidly to a peak value and then falls more slowly to zero.

For special purposes, impulses having approximately linearly rising fronts or transients of oscillating or approximately rectangular form are used.

The term "impulse" is to be distinguished from the term "surge" which refers to transients occurring in electrical equipment or networks in service.

3.1 *Lightning and switching impulses*

A distinction is made between lightning and switching impulses on the basis of duration of the front. Impulses with front duration up to 20 µs are defined as lightning impulses and those with longer fronts are defined as switching impulses.

Generally, switching impulses are also characterized by total durations considerably longer than those of lightning impulses.

4 Characteristics related to disruptive discharge and test voltages

4.1 *Disruptive discharge*

In this standard, the term "disruptive discharge" (sometimes referred to as "electrical breakdown") relates to phenomena associated with the failure of insulation under electrical stress, in which the discharge completely bridges the insulation under test, reducing the voltage between the electrodes practically to zero. It applies to electrical breakdown in solid, liquid and gaseous dielectrics and combinations of these.

Non-sustained disruptive discharge in which the test object is momentarily bridged by a spark or arc may occur. During these events the voltage across the test object is momentarily reduced to zero or to a very small value. Depending on the characteristics of the test circuit and the test object, a recovery of dielectric strength may occur and may even permit the test voltage to reach a higher value. Such an event should be interpreted as a disruptive discharge unless otherwise specified by the relevant Technical Committee.

Non-disruptive discharges such as those between intermediate electrodes or conductors may also occur without reduction of the test voltage to zero. Such an event should not be interpreted as a disruptive discharge unless so specified by the relevant Technical Committee.

Some non-disruptive discharges are termed "partial discharges" and are dealt with in IEC Publication 270: Partial Discharge Measurements.

The term "sparkover" is used when a disruptive discharge occurs in a gaseous or liquid medium.

The term "flashover" is used when a disruptive discharge occurs over the surface of a dielectric in a gaseous or liquid medium.

The term "puncture" is used when a disruptive discharge occurs through a solid dielectric.

A disruptive discharge in a solid dielectric produces permanent loss of dielectric strength; in a liquid or gaseous dielectric the loss may be only temporary.

4.2 *Characteristics of the test voltage*

The characteristics of a test voltage are those characteristics specified in this standard for designating the different types of voltage excursion that define the test voltage.

4.2.1 *Prospective characteristics of a test voltage*

The prospective characteristics of a test voltage causing disruptive discharge are the characteristics which would have been obtained if no disruptive discharge had occurred. When a prospective characteristic is used, this shall always be stated.

4.2.2 *Actual characteristics of a test voltage*

The actual characteristics of a test voltage are those which occur during the test at the terminals of the test object.

4.2.3 *Value of the test voltage*

The value of the test voltage is defined in the relevant Clauses of the present standard.

4.3 *Disruptive discharge voltage of a test object*

The disruptive discharge voltage of a test object is the value of the test voltage causing disruptive discharge, as specified, for the various tests, in the relevant Clauses of the present standard.

4.4 *Statistical characteristics of disruptive discharge voltages*

Disruptive discharge voltages are subject to random variations and, usually, a number of observations must be made in order to obtain a statistically significant value of the voltage. The test procedures, described in the present standard, are generally based on statistical considerations. Information on the statistical evaluation of test results is given in Appendix A.

4.4.1 *Disruptive discharge probability* p *of a test object*

The disruptive discharge probability p of a test object is the probability that one application of a certain prospective voltage value of a given shape will cause disruptive discharge in the test object. The parameter p may be expressed as a percentage or a fraction.

4.4.2 *Withstand probability* q *of a test object*

The withstand probability q of a test object is the probability that one application of a certain prospective voltage value of a given shape does not cause a disruptive discharge on the test object. If the disruptive discharge probability is p, the withstand probability q is $(1-p)$.

4.4.3 *50% disruptive discharge voltage* U_{50} *of a test object*

The 50% disruptive discharge voltage is the prospective voltage value which has a 50% probability of producing a disruptive discharge on the test object.

4.4.4 p% *disruptive discharge voltage* U_p *of a test object*

The p% disruptive discharge voltage of a test object is the prospective voltage value which has p% probability of producing a disruptive discharge on the test object.

4.4.5 *Conventional deviation* z *of the disruptive discharge voltage of a test object*

The conventional deviation z of the disruptive discharge voltage of a test object is the difference between its 50% and 16% disruptive discharge voltages. It is often expressed in per unit or percentage value, referred to the 50% disruptive discharge voltage.

NOTE — If the disruptive-discharge probability function (see Appendix A) is close to a Gaussian function, z is correspondingly close to its standard deviation.

4.5 *Withstand voltage of a test object*

The withstand voltage of a test object is a specified prospective voltage value which characterizes the insulation of the object with regard to a withstand test.

Unless otherwise specified, withstand voltages are referred to standard reference atmospheric conditions (see Clause 11.1).

4.6 *Assured disruptive discharge voltage of a test object*

The assured disruptive discharge voltage of a test object is a specified prospective voltage value which characterizes its performance with regard to a disruptive discharge test.

5 Classification of insulation in test objects

Insulation systems of apparatus and high voltage structures must basically be classified into self-restoring and non-self-restoring insulation and may consist of external and/or internal insulation.

5.1 *External insulation*

External insulation is the air insulation and the exposed surfaces of solid insulation of the equipment, which are subject both to dielectric stresses and to the effects of atmospheric and other external conditions such as pollution, humidity and vermin.

5.2 *Internal insulation*

Internal insulation comprises the internal solid, liquid or gaseous elements of the insulation of equipment, which are protected from the effects of atmospheric and other external conditions such as pollution, humidity and vermin.

5.3 *Self-restoring insulation*

Self-restoring insulation is the insulation which completely recovers its insulating properties after a disruptive discharge caused by the application of a test voltage.

5.4 *Non-self-restoring insulation*

Non-self-restoring insulation is insulation which loses its insulating properties, or does not recover them completely, after a disruptive discharge caused by the application of a test voltage.

NOTE — In high voltage apparatus, parts of both self-restoring and non-self-restoring insulation are always operating in combination and some parts may be degraded by repeated or continued voltage applications. The behaviour of the insulation in this respect shall be taken into account by the relevant Technical Committee when specifying the test procedures to be applied.

Section 3: General Requirements Relating to Test Procedures and Test Objects

6 General requirements for test procedures

The test procedures applicable to particular types of test objects, for example, the polarity to be used, the preferred order if both polarities are to be used, the number of applications and the interval between applications shall be specified by the relevant Technical Committee, having regard to such factors as:

— the required accuracy of test results;

— the random nature of the observed phenomenon and any polarity dependence of the measured characteristics;

— the possibility of progressive deterioration with repeated voltage applications.

7 General arrangement of the test object

At the time of a test, the test object shall be complete in all essential details, and it should have been processed in the normal manner for similar equipment.

The disruptive discharge characteristics of an object may be affected by its general arrangement (for example, by its clearance from other live or grounded structures, its height above ground level and the arrangement of its high voltage lead). The general arrangement should be specified by the relevant Technical Committee.

A clearance to extraneous structures not less than 1,5 times the length of the shortest possible discharge path on the test object usually makes such proximity effects negligible. In wet or pollution tests, or wherever the voltage distribution along the test object and the electric field around its energized electrode are sufficiently independent of external influences, smaller clearances may be acceptable, provided that discharges do not occur to extraneous structures.

In the case of a.c. or positive switching impulse tests above 750 kV (peak) the influence of an extraneous structure may be considered as negligible if its distance from the energized electrode is also not less than the height of this electrode above the ground plane. A practical lower limit to this clearance is given in figure 1, as a function of the highest test voltage.

A withstand test may be acceptable when successfully performed with shorter distances to earthed objects.

8 Dry tests

The test object shall be dry and clean. If not otherwise specified by the relevant Technical Committee, the test should be made at ambient temperature and the procedure for voltage application shall be as specified in the relevant Clauses of this standard.

9 Wet tests

The preferred wet test procedure, described in 9.1, is intended to simulate the effect of natural rain on external insulation and is a revision of earlier test methods. It is recommended for tests with all types of test voltages and on all types of apparatus, but either of the alternative test methods given below are permitted if specified by the relevant Technical Committee.

Two earlier test methods, not intended to simulate natural rain, are described in 9.2. They have been in use for many years for tests with alternating voltages on apparatus having U_m up to 420 kV and many test data obtained by these methods exist.

For a.c. apparatus of large dimensions, such as those having U_m higher than 800 kV, no appropriate wet test procedure is available at present.

The relevant Technical Committee shall specify the arrangement of the test object during the test procedure.

9.1 *Standard wet test procedure*

The test object shall be sprayed with water of prescribed resistivity and temperature (see table 1) falling on it as droplets (avoiding fog and mist) and directed so that the vertical and horizontal components of the spray intensity are approximately equal. These intensities are measured with a divided collecting vessel having openings of 100 cm^2 to 750 cm^2, one horizontal and one vertical, the vertical opening facing the spray.

The position of the test object relative to the vertical and horizontal rain components shall be specified by the relevant Technical Committee.

In general, the reproducibility of wet test results is less than that for other high voltage discharge or withstand tests. To minimize the dispersion the following precautions shall be taken:

— The collecting vessel shall be placed close to the test object, but avoiding the collection of drops or splashes from it. During the measuring period, it should be moved slowly over a sufficient area to average but not completely mask the effect of non-uniformities of the spray from individual nozzles. This measuring zone shall have a width equal to that of the test object and a maximum height of 1 m.

— For test objects between 1 m and 3 m in height, the individual measurements shall be made at the top, centre and bottom of the test object. Each measuring zone shall cover only one third of the height of the test object.

— For test objects exceeding 3 m in height, the number of measuring zones shall be increased to cover the full height of the test object without overlapping.

— The above procedures shall be suitably adapted for test objects having large horizontal dimensions.

— The spread of results may be reduced if the test object is cleaned with a surface-active detergent which has to be removed before the beginning of wetting.

— The spread of results may also be affected by local anomalous (high or low) precipitation rates. It is recommended to detect these by localized measurements and to improve the uniformity of the spray, if necessary.

The spray apparatus shall be adjusted to produce, within the specified tolerances, precipitation conditions at the test object given in table 1.

Any type and arrangement of nozzles meeting the requirements given in table 1 may be used. Examples of several nozzles which have been found satisfactory in practice are shown in figures 2a, 2b and 2c, together with typical performance data for each type. Greater spray distances may be obtained if the nozzles are directed upward at an angle of about 15°–25° to the horizontal. Note that if the water pressure is increased above the recommended limits, the water jets may break up prematurely and cause an unsatisfactory spray at the test object.

Table 1 — Precipitation conditions for standard procedure

Average precipitation rate of all measurements		
— vertical component	mm/min	1,0 to 2,0
— horizontal component	mm/min	1,0 to 2,0
Limits for any individual measurement and for each component	mm/min	±0,5 from average
Temperature of water	°C	Ambient temperature ±15
Resistivity of water	Ω m	100 ± 15

The water temperature and resistivity shall be measured on a sample collected immediately before the water reaches the test object. They may also be measured at other locations (e.g., in a storage reservoir) provided that a check ensures that no significant change occurs by the time the water reaches the test object.

The test object shall be pre-wetted initially for at least 15 min under the above specified conditions and these conditions shall remain within the specified tolerances throughout the test which should be performed without interrupting the wetting. The pre-wetting time shall not include the time needed for adjusting the spray. It is also possible to perform an initial pre-wetting by unconditioned mains water for 15 min, followed without interruption of the spray by a second pre-wetting for at least 2 min before the test begins.

using water with all the correct precipitation conditions, which should be measured immediately before starting the test.

Unless otherwise specified by the relevant Technical Committee, the test procedure for wet tests shall be the same as that specified for the corresponding dry tests. The test duration for an a.c. test shall be 60 s, if not otherwise specified. In general, for alternating and direct voltage wet withstand tests, it is recommended that one flashover should be permitted provided that in a repeat test no further flashover occurs.

9.2 *Traditional procedures for wet tests with alternating voltages*

For alternating voltage tests, two other procedures are also in use, details of which are given in table 2. They differ from the standard procedure, 9.1, primarily in that the precipitation rates are higher and that the minimum pre-wetting time is only 1 m.

Only the vertical component of the spray is specified; determination of the horizontal component is replaced by a visual estimate of the spray angle which should be approximately 45° at the test object.

Table 2 — Precipitation conditions for traditional procedures with alternating voltages

Characteristics		European practice	Practice in U.S.A.
Average precipitation rate of all measurements:			
— vertical component	mm/min	3 ± 0,3	5 ± 0,5
Limits for any individual measurement	mm/min	3 ± 0,75	5 ± 1,25
Water temperature	°C	Ambient temperature ±15	
Water resistivity	Ω m	100 ± 10	178 ± 27
Type of nozzle as shown in figures		2a,2b ,2c	figure 2d
Duration of wet withstand test	s	60	10

10 Artificial pollution tests

Artificial pollution tests are intended to provide information on the behaviour of external insulation under conditions representative of pollution in service, although they do not necessarily simulate any particular service conditions.

The following specifications give some general guidance on artificial pollution testing. It is left to the relevant Technical Committee to introduce variations or to give more specific requirements for particular classes of apparatus. Such specific information is given in one instance by IEC 507.

The effects of washing of insulators in service by natural rain is not taken into consideration in any of the specified procedures.

10.1 *Preparation of test object*

Before testing for the first time, the metal parts of the test object, and any cement joints, may be painted with salt-water-resistant paint to ensure that corrosion products will not contaminate the insulating surfaces during a test.

The test object should then be carefully cleaned by washing with tap water to which trisodium phosphate (Na_3PO_4) has been added and rinsed with clean tap water. It shall not subsequently be touched by hand. Usually the insulating surfaces can be considered sufficiently clean and free of grease or other contaminating material if large continuous wet areas are observed during wetting.

It is left to the relevant Technical Committee to decide whether the test object should be tested in a vertical, horizontal or an inclined position.

10.2 *Test procedures*

Artificial pollution tests involve application of the pollution and the simultaneous or subsequent application of voltage. Generally, only methods in which the test voltage is held constant for at least several minutes are recommended. Other methods in which the voltage is raised gradually to flashover are not proposed for standardization but may be used for special purposes.

The pollution test may be made either to determine the maximum degree of pollution of the test object which allows a given test voltage to be withstood, or to determine the withstand voltage for a specified degree of pollution. For the purpose of comparing the results of several tests, or the performance of several test objects, the former procedure is preferable. Whichever test procedure is adopted, the number of measurements should be sufficient to obtain consistent average values, taking into account the statistical nature of the phenomenon. The number of tests required shall be specified by the relevant Technical Committee.

The pollution tests fall into two categories, the salt-fog method and the pre-deposited pollution method.

a) The salt-fog method

The test object is placed in a special chamber which can be filled by a salt fog. The method for producing the fog is described in Appendix B1. The ambient temperature in the chamber at the start of the test shall not be less than 5°C, nor greater than 30°C and the test object and the salt water shall be in thermal equilibrium with the ambient temperature.

The test object is thoroughly wetted with clean tap water. The salt-fog system, supplied by water of the prescribed salinity, is started when the test object is still wet and, simultaneously, the voltage is applied to the test object, raised rapidly to the specified value and kept constant during the specified time, usually

1 h, or until flashover occurs. This procedure is repeated several times. Before each procedure the test object is thoroughly washed with clean tap water to remove any trace of salt.

For the salt-fog method, the minimum distance between any part of the test object and any earthed object other than the jets and the structure which supports the insulator shall be not less than 0,5 m per 100 kV of the test voltage and, in any case, not less than 2 m.

If the test is intended to determine the maximum degree of salinity for a specified withstand voltage, the whole procedure must be repeated using various salinities.

Pre-conditioning of the test object by a number of flashovers during the application of pollution is required before the real test begins. This pre-conditioning should be followed by a washing.

b) The pre-deposited pollution method

The test object is coated with a reasonably uniform layer of a conductive suspension and shall be permitted to dry. The ambient temperature in the test chamber at the start of the test should not be less than 5°C nor greater than 30°C and the test object should be in thermal equilibrium with the ambient. The wetting shall be accomplished by means of a steam fog generator which provides a uniform fog distribution over the whole length and around the test object. The temperature of the fog in the vicinity of the test object shall not exceed 40°C. To obtain the necessary wetting within a reasonable time, enough steam fog shall be introduced inside the test chamber. The steam generation rate shall be specified by the relevant Technical Committee.

In one procedure the voltage is applied before the test object is wetted by the fog and continues until flashover or for about twice the time for the insulator to achieve its maximum conductivity. In another procedure, the test voltage is applied only when the conductivity has reached its maximum value, which should occur between 20 and 40 min from the start of fogging. The voltage shall be kept constant during the specified 15-min test time or until flashover occurs.

Examples of suitable coating and wetting procedures and of the measurement of the surface resistivity are given in Appendix B.

The procedure above may be repeated several times; before each test, the test object shall be washed, re-coated and allowed to dry.

When the test is intended to determine the maximum degree of pollution for a specified withstand voltage, the coating, wetting and test procedures must be repeated using various suspension resistivities.

The minimum distance between any part of the test object and any earthed object other than the structure which supports the test object shall be not less than 0,5 m per 100 kV of the test voltage.

10.3 *Degree of pollution*

The degree of pollution of a test object is specified by the salinity (g/L) of the salt fog, by the surface conductivity (μS) or by the amount of salt (NaCl) per square centimetre of the insulating surface (gm/cm^2). This latter is normally referred to as the Salt Deposit Density (S.D.D.). Information about these methods is given in Appendix B.

11 Atmospheric conditions

11.1 *Standard reference atmosphere*

The standard reference atmosphere is:

temperature $t_0 = 20°C$

pressure $b_0 = 101,3$ kPa (1013 mbar)

absolute humidity $h_0 = 11$ g/m^3

NOTE — A pressure of 101,3 kPa corresponds to the height of 760 mm in a mercury barometer at 0°C. If the barometer height is H mm of mercury, the atmospheric pressure in kilopascals is approximately:

$$b = 0,1333 H \text{ kPa}$$

Correction for temperature with respect to the height of the mercury column is considered to be negligible.

11.2 *Atmospheric correction factors*

The disruptive discharge of external insulation depends upon the atmospheric conditions. Usually, the disruptive discharge voltage for a given path in air is increased by an increase in either air density or humidity. However, when the relative humidity exceeds about 80%, the disruptive discharge voltage becomes irregular, especially when the disruptive discharge occurs over an insulating surface.

By applying correction factors, a disruptive discharge voltage measured in given test conditions (temperature t, pressure b, humidity h) may be converted to the value which would have been obtained under the standard reference atmospheric conditions (t_0, b_0, h_0). Conversely, a test voltage specified for given reference conditions can be converted into the equivalent value under the test conditions.

The disruptive discharge voltage is proportional to the atmospheric correction factor K_t, that results from the product of two correction factors:

— the air density correction factor k_1 (see 11.2.1);

— the humidity correction factor k_2 (see 11.2.2).

$$K_t = k_1 k_2$$

If not otherwise specified by the relevant Technical Committee, the voltage U to be applied during a test on external insulation is determined by multiplying the specified test voltage U_0 by K_t:

$$U = U_0 K_t$$

Similarly, measured disruptive discharge voltages U are corrected to U_0 corresponding to standard reference atmosphere by dividing by K_t:

$$U_0 = U/K_t$$

The test report shall always contain the actual atmospheric conditions during the test and the correction factors applied.

11.2.1 *Air density correction factor* k_1

The air density correction factor k_1 depends on the relative air density δ and can be generally expressed as:

$$k_1 = \delta^m$$

where m is an exponent given in 11.2.3.

When the temperatures t and t_0 are expressed in degrees Celsius and the atmospheric pressures b and b_0 are expressed in the same units (kilopascals or millibars), the relative air density is:

$$\delta = \frac{b}{b_0} \frac{273 + t_0}{273 + t}$$

11.2.2 *Humidity correction factor* k_2

The humidity correction factor may be expressed as:

$$k_2 = k^w$$

where w is an exponent given in 11.2.3 and k is a parameter that depends on the type of test voltage and that, for practical purposes, may be approximately obtained as a function of the ratio of absolute humidity, h, to the relative air density, δ, using the curves of figure 3. For values of h/δ in excess of 15 g/m^3 humidity corrections are still under consideration, and the curves in figure 3 may be regarded as upper limits.

11.2.3 *Exponents* m *and* w

As the correction factors depend on the type of predischarges, this fact can be taken into account by considering the parameter:

$$g = \frac{U_B}{500 L \delta k}$$

where U_B is the 50% disruptive-discharge voltage (measured or estimated) at the actual atmospheric conditions, in kilovolts, L the minimum discharge path in metres, with the actual values for the relative air density δ and for the parameter k. In the case of a withstand test where an estimate of the 50% disruptive discharge voltage is not available, U_B can be assumed to be 1,1 times the test voltage.

The exponents m and w are still under consideration. Approximate values are given in figure 4.

11.3 *Wet tests, tests under artificial pollution and combined tests*

No humidity correction shall be applied for wet tests or for tests with artificial pollution. The question of density correction during such tests is under consideration. For combined tests see Clause 26.5.

11.4 *Conflicting requirements for testing internal and external insulation*

While withstand levels are specified under standard atmospheric conditions, cases will arise where the application of atmospheric corrections (due to laboratory altitude or to extreme climatic conditions) results in the withstand level for internal insulation appreciably in excess of that for the associated external insulation. In such cases measures to enhance the withstand level of the external insulation must be adopted to permit application of the correct test voltage to the internal insulation. These measures include immersion of the external insulation in liquids or compressed gases and should be specified by the relevant Technical Committee with reference to the requirements of particular classes of apparatus. In those cases where the test voltage of the external insulation is higher than that of the internal insulation, the external insulation can only be correctly tested when the internal insulation is especially designed with increased strength. If not, the internal insulation should be tested with the rated value and the external insulation be tested by means of dummies unless the relevant Technical Committee states otherwise, in which case it shall specify the test procedure to be used.

11.5 *Measurement of humidity*

The humidity shall be determined preferably with the meter measuring directly the absolute humidity with an absolute error not larger than 1 g/m^3. Measurement of relative humidity associated with the temperature measurements also allows determination of the absolute humidity and can be used provided that the accuracy of the absolute humidity determination in this case is the same as required above.

NOTE — This measurement may also be made by means of a ventilated wet and dry bulb hygrometer. The absolute humidity as a function of the thermometer readings is determined from figure 5 which also permits determination of the relative humidity. It is important to provide adequate air flow in order to reach a steady state and to read the thermometers carefully in order to avoid excessive errors in the determination of the humidity.

Section 4: Tests with Direct Voltage

12 Definitions for direct voltage tests

12.1 *Value of the test voltage*

The value of the test voltage is defined as its arithmetic mean value.

12.2 *Ripple*

Ripple is the periodic deviation from the arithmetic mean value of the voltage. The amplitude of the ripple is defined as half the difference between the maximum and minimum values. The ripple factor is the ratio of the ripple amplitude to the arithmetic mean value.

13 Test voltage

13.1 *Requirements for the test voltage*

13.1.1 *Voltage shape*

The test voltage, as applied to the test object, should be a direct voltage with not more than 3% ripple factor, unless otherwise specified by the relevant Technical Committee. Note that the ripple factor may be affected by the presence of the test object and by the test conditions, especially in wet tests and in tests under artificial pollution.

13.1.2 *Tolerances*

For test durations not exceeding 60 s, the measured values of the test voltage shall be maintained within ±1% of the specified level throughout the test. For test durations exceeding 60 s, the measured value of the test voltage shall be maintained within ±3% of the specified level throughout the test.

NOTE — It is emphasized that the tolerance constitutes the permitted difference between the specified value and that actually measured. This difference should be distinguished from the measuring error which is the difference between the measured value and the true value.

13.2 *Generation of the test voltage*

The test voltage is generally obtained by means of rectifiers, though sometimes electrostatic generators are employed. The requirements to be met by the test voltage source depend considerably upon the type of apparatus which is to be tested and on the test conditions. These requirements are determined mainly by the value and nature of the test current to be supplied, the important constituents of which are indicated in 13.4.

The source characteristics should be such as to permit charging of the capacitance of the test object in a reasonably short time. In the case of objects having high capacitance, charging times of several minutes must sometimes be accepted. The source, including its storage capacitance, should also be adequate to supply the leakage and absorption currents and any internal and external non-disruptive discharge currents

without voltage drops exceeding 10%. In tests on internal insulation, these currents are usually small, but when testing wet insulators, leakage currents of the order of some tens of milliamperes or pre-discharge pulses of the order of 10^{-2} C may occasionally be encountered.

Source parameters for D.C. pollution tests are under investigation.

13.3 *Measurement of the test voltage*

13.3.1 *Measurement with devices approved under IEC Publication 60-3: High Voltage Test Techniques — Measuring Devices*

The measurement of the arithmetic mean value, the maximum value, the ripple factor and any transient drop in the test voltage should, in general, be made with devices which have passed the approval procedure referred to in IEC Publication 60-3. Attention is drawn to the requirements on response characteristics of devices used for measuring ripple, transients or voltage stability.

13.3.2 *Calibration of a non-approved measuring device with an approved measuring device*

The procedure usually consists of establishing a relationship between the display of some device related to the test voltage and a measurement of the same voltage performed in accordance with 13.3.1, with a sphere-gap, used in accordance with IEC Publication 52, or with a rod/rod gap, used in accordance with 13.3.3.

This relationship may be dependent on the presence of the test object, the sphere-gap or rod/rod gap, on the precipitation in wet tests, etc. Hence, it is important that these conditions are the same during the calibration and the actual test, except that, during the test, the sphere-gap or rod/rod gap shall be opened sufficiently to prevent sparkover. The relationship between the supply voltage and the output voltage may be insufficiently stable for measuring purposes.

Attention is drawn to the precautions necessary when using a sphere-gap under direct voltages, due to the occurrence of flashovers at lower voltage values predominantly resulting from the presence of microscopic fibrous particles. A series of voltage applications shall be made and the highest voltage value is taken as the true measure.

NOTE 1 — The problem of fibrous particles can be overcome by providing an air flow of not less than 3 m/s through the gap.

NOTE 2 — In the presence of ripple, sphere-gaps do not measure the arithmetic mean value of the voltage.

The calibration is preferably made at or near 100% of the test voltage, but for tests on objects with non-self-restoring insulation, extrapolation may be made from a value not lower than 50% of this voltage. Extrapolation may be unsatisfactory if the current in the test circuit varies non-linearly with the applied voltage.

13.3.3 *The rod/rod gap as an approved measuring device*

A rod/rod gap with dimensions as given in Appendix C and used in accordance with this Appendix is an approved measuring device for measuring direct voltages.

13.4 *Measurement of the test current*

When measurements of current through the test object are made, a number of separate components may be recognized. These differ from each other by several orders of magnitude for the same test object and test voltage. They are:

— the capacitance current, due to the initial application of the test voltage and to any ripple or other fluctuations imposed on it;

— the dielectric absorption current, due to slow charge displacements within the insulation and persisting for periods of a few seconds up to several hours. This process is partially reversible, currents of the opposite polarity being observed when the test object is discharged and short-circuited;

— the continuous leakage current, which is the final steady direct current attained at constant applied voltage after the above components have decayed to zero;

— partial discharge currents.

Measurement of the first three components necessitates the use of instruments covering a wide range of current magnitudes. It is important to ensure that the instrument, or the measurement of any one component of the current, is not adversely affected by the other components. Information concerning the condition of the insulation may sometimes be obtained by observing current variations with respect to time, during non-destructive tests.

The relative magnitude and the importance of each component of current depend on the type and the condition of the test object, the purpose for which the test is being made and the duration of the test. Accordingly, the measurement procedures should be specified by the relevant Technical Committee, especially when it is required to distinguish a particular component.

Measurements of partial discharge pulse currents are made with special instruments which are dealt with in IEC Publication 270 (1981): Partial Discharge Measurements.

NOTE — Attention should be paid to the possible value of current flowing in the case of a disruptive discharge, that could destroy a current meter if not adequately protected.

14 Test procedures

14.1 *Withstand voltage tests*

The voltage shall be applied to the test object starting at a value sufficiently low to prevent any effect of overvoltage due to switching transients. It should be raised sufficiently slowly to permit reading of the instruments, but not so slowly as to cause unnecessary prolongation of stressing of the test object near to the test voltage U. These requirements are in general met if the rate of rise is about 2% of U per second

when the applied voltage is above 75% of U. It shall be maintained for the specified time and then reduced by discharging the circuit capacitance, including that of the test object, through a suitable resistor.

The test duration shall be specified by the relevant Technical Committee taking into consideration that the time to reach the steady-state voltage distribution depends on the resistances and capacitances of the test object components. When not otherwise specified by the relevant Technical Committee, the duration of a withstand test shall be 60 s.

The polarity of the voltage or the order in which voltages of each polarity are applied, and any required deviation from the above specifications, shall be specified by the relevant Technical Committee.

The requirements of the test are satisfied if no disruptive discharge occurs on the test object.

14.2 *Disruptive discharge voltage tests*

The voltage shall be applied and raised continuously until a disruptive discharge occurs on the test object. The value of the voltage reached at the instant of the disruptive discharge shall be recorded.

The relevant Technical Committee shall specify the voltage rate of rise, the number of voltage applications and the procedure for evaluating the test results (see Appendix A).

14.3 *Assured disruptive discharge voltage tests*

The voltage shall be applied and raised continuously until a disruptive discharge occurs on the test object. The value of the test voltage reached at the instant of the disruptive discharge shall be recorded.

The requirements of the test are generally satisfied if this voltage does not exceed the assured disruptive discharge voltage on a specified number of voltage applications.

The relevant Technical Committee shall specify the number of voltage applications and the voltage rate of rise.

Section 5: Tests with Alternating Voltage

15 Definitions for alternating voltage tests

15.1 *Definitions for alternating voltage tests*

15.1.1 *Value of the test voltage*

The value of the test voltage is defined as its peak value divided by $\sqrt{2}$.

NOTE — The relevant Technical Committee may require a measurement of the r.m.s. value of the test voltage instead of the peak value for cases where the r.m.s. value may be of importance, for instance, when thermal effects are involved.

15.2 *Peak value*

The peak value of an alternating voltage is the maximum value. Small high-frequency oscillations, arising for instance from non-disruptive discharges shall, however, be disregarded.

15.3 *R.M.S. value*

The r.m.s. value of an alternating voltage is the square root of the mean value of the square of the voltage values during a complete cycle.

16 Test Voltage

16.1 *Requirements for the test voltage*

16.1.1 *Voltage waveshape*

The test voltage shall be an alternating voltage generally having a frequency in the range 45 to 65 Hz, normally referred to as power-frequency test voltage. Special tests may be required at frequencies considerably below or above this range, as specified by the relevant Technical Committee.

The voltage waveshape shall approximate a sinusoid with both half-cycles closely alike. The results of a high voltage test are thought to be unaffected by small deviations from a sinusoid if the ratio of peak to r.m.s. values equals $\sqrt{2}$ within ±5%.

For some test circuits in common use greater deviations have to be accepted. Note that the test object, especially if it has non-linear impedance characteristics, may considerably affect the deviation from a sinusoid.

NOTE — It can generally be assumed that the above requirements on deviations from a sinusoid will be met if the r.m.s. value of the harmonics does not exceed 5% of the r.m.s. value of the fundamental.

16.1.2 *Tolerances*

If not otherwise specified by the relevant Technical Committee the measured values of the test voltage shall be maintained within ±1% of the specified level throughout the test. For test durations exceeding 60 s the measured value of the test voltage shall be maintained within ±3% of the specified level throughout the test.

NOTE — It is emphasized that the tolerance constitutes the permitted difference between the specified value and that actually measured. This difference should be distinguished from the measuring error which is the difference between the measured value and the true value.

16.2 *Generation of the test voltage*

16.2.1 *General requirements*

The test voltage is generally supplied from a step-up transformer. Alternatively, it may be generated by means of a series-resonant circuit.

The voltage in the test circuit shall be stable enough to be practically unaffected by varying leakage currents. Non-disruptive discharges in the test object shall not reduce the test voltage to such an extent and for such a time that the measured disruptive discharge voltage of the test object is significantly affected.

In the case of non-disruptive discharges, unless otherwise specified by the relevant Technical Committee, a withstand test is considered satisfactory when it can be shown that the peak value of the test voltage does not differ by more than 5% in successive periods and that the instantaneous voltage drop during a non-disruptive discharge does not exceed 20% of the peak voltage. The characteristics of the test circuit which are necessary to meet the above requirements depend on the type of test (dry, wet, etc.), the test voltage level and the test object behaviour.

NOTE — Attention is drawn to the possibility that such non-disruptive discharges may cause large overswings of voltage between the terminals of the test object. This phenomenon may cause failure of the test object or of the testing transformer. A cure can usually be effected by changing the natural frequency of the voltage source or by introducing some attenuation into the system.

16.2.2 *Requirements for the transformer test circuit*

In order to have the test voltage practically unaffected by varying leakage currents the short-circuit current, delivered by the transformer when the test object is short-circuited at the test voltage, should be large enough in comparison with the leakage currents at the supply frequency and in any case in respect of the following guiding criteria:

— for dry tests on small samples of solid insulation, insulating liquids or combinations of the two, a short-circuit current of the order of 0,1 A (r.m.s.) is suitable;

— for tests on external self-restoring insulation (insulators, disconnecting switch, etc.) a short-circuit current not less than 0,1 A (r.m.s.) for dry tests and 0,5 A (r.m.s.) for wet tests is suitable; however, for wet tests on objects having large dimensions that may lead to high leakage currents, a short-circuit current up to 1 A could be necessary.

NOTE — When the test circuit is supplied by a rotating generator, the transient short-circuit current (see IEC Publication 34-4) should be considered.

The total capacitance of the test object and of any additional capacitor should be sufficient to ensure that the measured discharge voltage is unaffected by non-disruptive partial discharges or pre-discharges in the test object. A capacitance in the range from 0,5 to 1,0 nF is generally sufficient.

NOTE — If any protective resistor external to the test transformer does not exceed 10 kΩ, the effective terminal capacitance of the transformer may be regarded as being in parallel with the test object.

For tests under artificial pollution, higher values of the short-circuit current, up to 15 A or more, are necessary (see IEC Publication 507); the testing plant should also comply with the two following conditions:

— resistance/reactance ratio (R/X) equal to or higher than 0,1;

— capacitive current/short-circuit current ratio not exceeding the interval 0,001 to 0,1.

The voltage stability could be verified by the direct recording of the voltage applied to the test object, by means of a suitable high voltage measuring system.

16.2.3 *The series-resonant circuit*

The series-resonant circuit consists essentially of an inductor in series with a capacitive, test object or load and connected to a medium voltage power source. Alternatively it may consist of a capacitor in series with an inductive test object. By varying the circuit parameters or the supply frequency, the circuit can be tuned to resonance, when a voltage considerably greater than that of the source and of substantially sinusoidal shape will be applied to the test object.

The stability of the resonance conditions and of the test voltage depends on the constancy of the supply frequency and of the test circuit characteristics.

When a discharge occurs, the source gives a relatively low current which limits the damage to the dielectric of the test object.

The series-resonant circuit is especially useful when testing objects such as cables, capacitors or gas-insulated systems in which the leakage currents on the external insulation are very small in comparison with the capacitive currents through the test object or the energy to form a disruptive discharge is very small. A series-resonant circuit is also useful for testing reactors.

The circuit may be unsuitable for external insulation under wet or polluted conditions, unless the requirements of 16.2.1 are satisfied.

16.3 *Measurement of the test voltage*

16.3.1 *Measurement with devices approved under IEC Publication 60-3*

The measurement of the peak value, the r.m.s. value, the deviation from a sinusoid and the transient drops should in general be made with devices which have passed the approval procedures referred to in IEC Publication 60-3.

Attention is drawn to the requirements on response characteristics of the devices used for measuring transient voltage drops.

16.3.2 *Calibration of a non-approved measuring device with an approved measuring device*

The procedure usually consists of establishing a relationship between the display of some device related to the test voltage and a measurement of the same voltage performed in accordance with 16.3.1 or with a sphere-gap used in accordance with IEC Publication 52.

This relationship may be dependent on the presence of the test object and the sphere-gap, the precipitation in wet tests, etc. Hence, it is important that these conditions are the same during the calibration and the actual test, except that, during the test, the sphere-gap may be opened sufficiently to prevent sparkover.

The relationship between the supply voltage and the output voltage may not be sufficiently stable for measuring purposes.

The calibration is preferably made at or near 100% of the test voltage, but for tests on objects with non-self-restoring insulation, extrapolation may be made from a value not lower than 50% of this voltage. Extrapolation may be unsatisfactory if the current in the test circuit varies non-linearly with the applied voltage, or if any changes occur in the voltage shape or frequency between the calibration and the test voltage levels.

17 Test procedures

17.1 *Withstand voltage tests*

The voltage shall be applied to the test object starting at a value sufficiently low to prevent any effect of overvoltages due to switching transients. It should be raised sufficiently slowly to permit reading of the measuring instrument but not so slowly as to cause unnecessary prolongation of the stressing of the test object near to the test voltage U. These requirements are in general met if the rate of rise is about 2% of U per second, when the applied voltage is above 75% of U. It shall be maintained for the specified time and then rapidly decreased, but not suddenly interrupted as this may generate switching transients which could cause damage or erratic test results.

The test duration shall be specified by the relevant Technical Committee and shall be independent of the frequency in the range from 45 to 65 Hz. If not specified by the relevant Technical Committee the duration of a withstand test shall be 60 s.

The requirements of the test are satisfied if no disruptive discharge occurs on the test object.

17.2 *Disruptive discharge voltage tests*

The voltage shall be applied and raised continuously until a disruptive discharge occurs on the test object. The value of the test voltage reached at the instant of the disruptive discharge shall be recorded.

The relevant Technical Committee shall specify the rate of rise of the voltage, the number of voltage applications and the procedure for evaluating the test results (see Appendix A).

17.3 *Assured disruptive discharge voltage tests*

The voltage shall be applied and raised continuously until a disruptive discharge occurs on the test object. The value of the test voltage reached at the instant of the disruptive discharge shall be recorded.

The requirements of the test are generally satisfied if this voltage is not higher than the assured disruptive discharge voltage on each one of a specified number of voltage applications.

The relevant Technical Committee shall specify the number of voltage applications and the rate of rise of the voltage.

Section 6: Tests with Lightning Impulse Voltage

18 Definitions for lightning impulse tests

18.1 *Definitions of general applicability*

These definitions apply to impulses without oscillations or overshoot or to the mean curve drawn through the oscillations and overshoot.

18.1.1 *Full lightning impulse*

A full lightning impulse is a lightning impulse which is not interrupted by a disruptive discharge (see figure 6). See Clause 3 for definition of impulse and 3.1 for distinction between lightning and switching impulses.

18.1.2 *Chopped lightning impulse*

A chopped lightning impulse is a lightning impulse during which a disruptive discharge causes a rapid collapse of the voltage, practically to zero value (see figures 7–9). The collapse can occur on the front, at the peak or on the tail.

NOTE — The chopping can be accomplished by an external chopping gap or may occur due to a discharge in the internal or external insulation of a test object.

18.1.3 *Value of the test voltage*

For a lightning impulse without oscillations, the value of the test voltage is its peak value.

The determination of the peak value in the case of oscillations or overshoot on standard lightning impulses is considered in 19.2.

For other impulse shapes (see for example figures 10 e–h) the relevant Technical Committee shall define the value of the test voltage taking into account the type of test and test object.

18.1.4 *Front time* T_1

The front time T_1 of a lightning impulse is a virtual parameter defined as 1,67 times the interval T between the instants when the impulse is 30% and 90% of the peak value (points A and B, figures 6–9).

18.1.5 *Virtual origin* O_1

The virtual origin O_1 of a lightning impulse is the instant preceding that corresponding to point A (see figures 6–9) by a time $0{,}3T_1$. For records having linear time scales, this is the intersection with the time axis of a straight line drawn through the reference points A and B on the front.

18.1.6 *Time to half-value* T_2

The time to half-value T_2 of a lightning impulse is a virtual parameter defined as the time interval between the virtual origin O_1 and the instant when the voltage has decreased to half the peak value.

18.2 *Definitions applicable only to chopped impulses*

A chopped lightning impulse is a lightning impulse during which a disruptive discharge causes a rapid collapse of the voltage, which then falls to zero or nearly to zero, with or without oscillations (see figures 7–9).

NOTE — With some test objects or test arrangements, there may be a flattening of the peak or a rounding off of the voltage before the final voltage collapse. Similar effects may also be observed due to the imperfections of the measuring system. Exact determination of the parameters related to chopping (18.2.1 to 18.2.5) requires the presence of both a sharp discontinuity and a special measuring system. Other cases are left to the relevant Technical Committees for consideration.

18.2.1 *Instant of chopping*

The instant of chopping is that at which the rapid collapse of voltage which characterizes the chopping first occurs.

18.2.2 *Time to chopping* T_c

The time to chopping T_c is a virtual parameter defined as the time interval between the virtual origin O_1 and the instant of chopping.

18.2.3 *Characteristics related to the voltage collapse during chopping*

The virtual characteristics of the voltage collapse during chopping are defined in terms of two points C and D at 70% and 10% of the voltage at the instant of chopping, see figure 7. The duration of the voltage collapse is 1,67 times the time interval between points C and D. The steepness of the voltage collapse is the ratio of the voltage at the instant of chopping to the duration of voltage collapse.

NOTE — The use of points C and D is for definition purposes only; it is not implied that the duration and steepness of chopping can be measured with any degree of accuracy using conventional measuring systems.

18.2.4 *Linearly rising front-chopped impulses*

A voltage rising with approximately constant steepness, until it is chopped by a disruptive discharge, is described as a linearly rising front-chopped impulse.

To define such an impulse, the best fitting straight line is drawn through the part of the front between 30% and 90% of the peak amplitude; the intersections of this with the 30% and 90% amplitudes then being designated E and F, respectively (see figure 9).

The impulse is defined by:

— the peak voltage U,

— the front time T_1,

— the virtual steepness S:

$$S = U / T_1$$

This is the slope of the straight line drawn through the points E and F, usually expressed in kilovolts per microsecond.

This chopped impulse is considered to be approximately linearly rising if the front, from 30% amplitude up to the instant of chopping, is entirely enclosed between two lines parallel to the line EF, but displaced from it in time by $\pm 0{,}05\ T_1$ (see figure 9).

NOTE — The value and the tolerance on the virtual steepness S shall be specified by the relevant Technical Committee.

18.3 *Voltage/time curves*

18.3.1 *Voltage/time curves for linearly rising impulses*

The voltage/time curve for impulses with fronts rising linearly is the curve relating the peak voltage to the front time T_1. The curve is obtained by applying impulses with linear fronts of different steepness.

18.3.2 *Voltage/time curve for impulses of constant prospective shape*

The voltage/time curve for impulses with constant prospective shape is the curve relating the discharge voltage of the test object to the time to chopping, which may occur on the front, at the peak or on the tail. The curve is obtained by applying impulse voltages of constant shape but with different prospective peak values (see figure 11).

19 Test Voltage

19.1 *Standard lightning impulse*

The standard lightning impulse is a full lightning impulse having a front time of 1,2 µs and a time to half-value of 50 µs. It is described as a 1,2/50 impulse.

19.2 *Tolerances*

If not otherwise specified by the relevant Technical Committee, the following differences are accepted between specified values for the standard impulse and those actually recorded:

Peak value	±3%
Front time	±30%
Time to half-value	±20%

NOTE 1 — It is emphasized that the tolerances on the peak value, front time and time to half-value constitute the permitted differences between specified values and those actually recorded by measurements. These differences should be distinguished from measuring errors which are the difference between the values actually recorded and the true values. For information on measuring errors, see IEC Publication 60-3 and 60-4.

With some test circuits, oscillations or an overshoot may occur at the peak of the impulse, see figures 10 a to d; if the frequency of such oscillations is not less than 0,5 MHz or the duration of overshoot not more than 1 μs, a mean curve should be drawn as in figures 10 a and b and, for the purpose of measurement, the maximum amplitude of this curve is chosen as the peak value defining the value of the test voltage.

Overshoot or oscillations in the neighborhood of the peak, measured by a system according to IEC Publication 60-3, are tolerated provided their single peak amplitude is not larger than 5% of the peak value. In commonly used impulse generator circuits, oscillations on that part of the wavefront during which the voltage does not exceed 90% of the peak value have generally negligible influence on test results. If the relevant Technical Committee finds these are of importance, it is recommended that their amplitudes, measured by a suitable measuring device, as specified in IEC Publication 60-3, are under the straight line drawn through the points A′ B′ (see figure 12). These points are taken on the verticals of, respectively, the points A and B determined according to 18.1.4, the distance AA′ being equal to 25% and BB′ to 5% of the peak value.

The impulse should be essentially unidirectional, but see Note 2.

NOTE 2 — In specific cases, such as during tests on low impedance objects or on UHV test circuits having large dimensions, it may be impossible to adjust the shape of the impulse within the tolerances recommended, to keep the oscillations and/or the overshoot within the specified limits or to avoid a polarity reversal. Such cases should be dealt with by the relevant Technical Committee.

19.3 *Standard chopped lightning impulse*

A standard chopped lightning impulse is a standard impulse chopped by an external gap after 2 to 5 μs. Other times to chopping may be specified by the relevant Technical Committee. Because of practical difficulties in measurements, the duration of voltage collapse has not been standardized.

19.4 *Special lightning impulses*

In some cases oscillating lightning impulses may be applied. This offers the possibility of producing impulses with shorter front times or with peak values corresponding to a generator efficiency greater than 1.

19.5 *Generation of the test voltage*

The impulse is usually produced by an impulse generator consisting essentially of a number of capacitors which are charged in parallel from a direct voltage source and then discharged in series into a circuit which includes the test object.

19.6 *Measurement of the test voltage and determination of impulse shape*

19.6.1 *Measurement with devices approved under IEC Publication 60-3*

The measurement of the peak value, the time parameters and the overshoot or oscillations on the test voltage should in general be made with devices which have passed the approval procedure referred to in IEC Publication 60-3. The measurement shall be made with the test object in the circuit and, in general, the impulse shape shall be checked for each test object. Where a number of test objects of the same design and size are tested under identical conditions, the shape needs only to be verified once.

NOTE — Determination of the impulse shape by calculation from the test circuit parameters is not considered to be satisfactory.

19.6.2 *Calibration of a non-approved measuring device with an approved measuring device*

The procedure usually consists of establishing a relationship between the display of some device related to the test voltage (for instance the maximum charging voltage of the first stage of the impulse generator) and a measurement of the same voltage performed in accordance with 19.6.1 or with a sphere-gap, used in accordance with IEC Publication 52.

The relationship may be dependent on the presence of the test object, of the sphere-gap, etc. Hence, it is important that these conditions are the same during the calibration and the actual test, except that during the test the sphere-gap may be opened sufficiently to prevent sparkover.

For tests on objects with self-restoring insulation, the calibration should be made at or near 100% of the test voltage. For tests on objects with non-self-restoring insulation, extrapolation may be unavoidable but such extrapolation shall be made from not less than 50% of the test voltage. The extrapolation is only permissible if it can be shown that the test voltage is proportional to the related quantity.

19.7 *Measurement of current during tests with impulse voltages*

The relevant Technical Committee shall specify the characteristics of a current flowing in the test object that should be measured during tests with high impulse voltages. When this type of measurement is used for comparative purposes wave shape is of importance and the measurement of the absolute value of this current may be of lesser importance.

20 Test Procedures

20.1 *Withstand voltage tests*

The recommended test procedure depends on the nature of the test object, as defined in Clause 5. The relevant Technical Committee shall specify which procedure shall be applied.

In procedures A, B and C the voltage applied to the test object is only the specified withstand value, while in procedure D several voltage levels have to be applied.

20.1.1 *Withstand voltage test: Procedure A*

Three impulses of the specified shape and polarity at the rated withstand voltage level are applied to the test object. The requirements of the test are satisfied if no indication of failure is obtained, using methods of detection specified by the relevant Technical Committee.

NOTE — This procedure is recommended for tests on degradable or non-self-restoring insulation.

20.1.2 *Withstand voltage test: Procedure B*

Fifteen impulses of the specified shape and polarity at the withstand voltage level are applied to the test object. The requirements of the test are satisfied if not more than two disruptive discharges occur in the self-restoring part of the insulation and if no indication of failure in the non-self-restoring insulation is obtained by the detection methods specified by the relevant Technical Committee.

20.1.3 *Withstand voltage test: Procedure C*

Three impulses of the specified shape and polarity at the withstand voltage level are applied to the test object. If no disruptive discharge occurs the test object has passed the test. If more than one disruptive discharge occurs the test object has failed to pass the test. If one disruptive discharge occurs in the self-restoring part of the insulation, then nine additional impulses are applied and if no disruptive discharge occurs the test object has passed the test.

If any detection of failure in a non-self-restoring part of insulation is observed with the detection methods specified by the relevant Technical Committee during any part of the test, the test object has failed to pass the test.

NOTE — This procedure corresponds to an American practice modified so as to be statistically equivalent to Procedure B.

20.1.4 *Withstand voltage test: Procedure D*

For self-restoring insulation the 10% impulse disruptive discharge voltage U_{10} may be evaluated by using statistical test procedures described in Appendix A.

These test methods permit either direct evaluation of U_{10} and U_{50} or indirect evaluation of U_{10}.

In the latter case U_{10} is derived from the U_{50} value using the relationship:

$$U_{10} = U_{50}(1 - 1,3z)$$

The relevant Technical Committee shall specify the value to be assumed for the conventional deviation z of the disruptive discharge voltage. For dry tests on air insulation, without any other insulation involved, the per-unit value $z = 0,03$ can be used.

The test object is deemed to be satisfactory if U_{10} is not less than the specified impulse withstand voltage.

The following test methods can be used to evaluate U_{50}:

a) the multiple-level method (see Clause A.1.1) with $n \geq 4$ voltage levels, and $m \geq 10$ impulses per level;

b) the up-and-down method (Clause A.1.2) with $m = 1$ impulse per group and $n \geq 20$ useful applications.

To evaluate U_{10}, the up-and-down withstand method, with $m = 7$ impulses per group and at least eight useful groups, can be used.

In all the cases the voltage interval between levels ΔU should be approximately from 1,5 to 3% of the estimated value of U_{50}.

20.2 *Procedures for assured discharge voltage tests*

The procedures for an assured discharge voltage test are similar to those described in 20.1 with the appropriate changes between discharge and withstand conditions.

The relevant Technical Committee may also specify other procedures for specific test objects.

Section 7: Tests with Switching Impulses

21 Definitions for switching impulse tests

21.1 *Switching impulse*

A switching impulse (as distinct from a lightning impulse) is defined in 3.1. The characteristics of a switching impulse are expressed by the parameters defined in 21.2 to 21.7 (see figure 13).

Additional parameters can be specified by the relevant Technical Committee when considering specific tests.

21.2 *Value of the test voltage*

If not otherwise specified by the relevant Technical Committee, the value of the test voltage is the prospective peak value.

21.3 *Time to peak* T_p

The time to peak T_p is the time interval between the actual origin and the instant when the voltage has reached its peak value.

21.4 *Time to half-value* T_2

The time to half-value T_2 for a switching impulse is the time interval between the actual origin and the instant when the voltage has first decreased to half the peak value.

21.5 *Time above 90%* T_d

The time above 90% T_d is the time interval during which the impulse voltage exceeds 90% of its peak value.

21.6 *Time to zero* T_0

The time to zero T_0 is the time interval between the actual origin and the instant when the voltage has its first passage to zero.

Specification of the time above 90% and time to zero instead of the time to half-value is found useful, for instance, when the form of the impulse is dictated by saturation phenomena in the test object or the test circuit, or where the severity of the test on important parts of internal insulation of the test object is considered to be highly dependent on these parameters. When specifying a switching impulse, only one set of parameters related to the waveshape is generally given. The particular time parameters defined should be clearly indicated by reference, for example, to a T_p / T_2 or $T_p / T_d / T_0$ impulse.

NOTE — to 21.3 to 21.6 — The front duration for switching impulses is sometimes alternatively defined in the same manner as the front for lightning impulses (18.1.4) or in a similar manner with other reference points and multiplying factors. For switching impulses with time parameters as given in 22.1, the time to peak is between 1,4 and 1,8 times the front time.

21.7 *Time to chopping* T_c

The time to chopping T_c of a switching impulse is the time interval between the actual origin and the instant of chopping.

21.8 *Linearly rising impulse*

The definition of a linearly rising impulse (applicable to both lightning and switching impulses) is given in 18.2.4.

22 Test voltage

22.1 *Standard switching impulse*

The standard switching impulse is an impulse having a time to peak T_p of 250 μs and a time to half-value T_2 of 2500 μs. It is described as a 250/2500 impulse.

22.2 *Tolerances*

If not otherwise specified by the relevant Technical Committee, the following differences are accepted between specified values and those actually recorded, both for standard and special impulses (see Note 1 to 19.2):

Peak value	±3%
Time to peak	±20%
Time to half-value	±60%

In certain cases, for instance with low impedance test objects, it may be difficult to adjust the shape of the impulse to within the tolerances recommended. In such cases other tolerances or other impulse shapes may be specified by the relevant Technical Committee.

NOTE — The disruptive discharge voltage of long gaps in air may be influenced by both the time to peak and the time to half-value of a switching impulse. Therefore it is recommended for such test objects that the applied switching impulse be characterized by its actual time parameters. Larger tolerances in the prospective time to half-value may be allowed in the case of a disruptive discharge occurring before or at the peak.

22.3 *Special switching impulses*

For special purposes, when the use of the standard switching impulse is not considered sufficient or appropriate, special switching impulses of either aperiodic or oscillating form may be prescribed by the relevant Technical Committee.

NOTE — When a discharge is initiated by a leader in air from a positively-charged electrode, two impulses may generally be considered as equivalent, when they have the same peak value and the same time interval between the respective two points on the front at 70% and 100% of the peak value.

22.4 *Generation of the test voltage*

Switching impulses are usually generated by a conventional impulse generator (see 19.5). They can also be generated by the application of a voltage impulse to the low-voltage winding of a testing transformer (or of a transformer to be tested). Other methods of generating switching impulses can be used, for example, involving the rapid interruption of current in a transformer winding.

The elements of a circuit for generating switching impulses should be chosen so as to avoid excessive distortion of the impulse shape due to non-disruptive discharge currents in the test object. Such currents can reach quite large values, especially during pollution tests on external insulation at high voltages. In test circuits having high internal impedance, they may cause severe distortion of the voltage or even prevent a disruptive discharge from occurring.

22.5 *Measurement of test voltage and determination of impulse shape*

The measurement of the test voltage and the determination of the impulse shape should be made as described in 19.6.1 and 19.6.2. Note that although IEC Publication 52, 1960, gives no information specifically related to the measurement of the peak value of switching impulses, measurements indicate that the sphere-gap can be regarded as an approved measuring device for switching impulse voltages.

23 Test procedures

The test procedures are in general the same as for lightning impulse testing and similar statistical considerations apply (see Clause 20 and Appendix A). Unless otherwise specified by the relevant Technical Committee, the conventional deviation of the disruptive discharge voltage for dry and wet tests on air insulation, without any other insulation involved, can be assumed to be:

$$z = 0{,}06$$

Correspondingly larger voltage intervals ΔU may be used when applying the multiple level or the up-and-down procedures.

NOTE — With switching impulses, disruptive discharges frequently occur at random times well before the peak. In presenting the results of discharge tests made in accordance with 20.1.4, the relationship between disruptive discharge probability and voltage is generally expressed in terms of the prospective peak value. However, another method is also in use in which the actual disruptive discharge voltage for every impulse is measured; the probability distribution of the measured voltage values is then determined by the method described for Class 3 tests in Appendix A.

Section 8: Tests with Impulse Current

24 Definitions for impulse current tests

24.1 *Impulse current*

Two types of impulse currents are used. The first type has a shape which increases from zero to peak value in a short time, and thereafter decreases to zero either approximately exponentially or in the manner of a heavily-damped sine curve. This type is defined by the front time T_1 and the time to half-value T_2 (see 24.3 and 24.5).

The second type has an approximately rectangular shape and is defined by the duration of the peak and the total duration (see 24.6 and 24.7).

24.2 *Value of the test current*

The value of the test current is normally defined by the peak value. With some test circuits, overshoot or oscillations may be present on the current waveform. The relevant Technical Committee shall specify whether the value of the test current should be defined by the actual peak or by a smooth curve drawn through the oscillations.

24.3 *Front time* T_1

The front time T_1 of an impulse current is a virtual parameter defined as 1.25 times the interval T, between the instants when the impulse is 10% and 90% of the peak value (see figure 14a). If oscillations are present on the front, the 10% and 90% values shall be derived from a mean curve drawn through these oscillations in a manner analogous to that used for lightning impulses with oscillations on the front.

24.4 *Virtual origin* O_1

The virtual origin O_1 of an impulse current precedes by $0{,}1T_1$ that instant at which the current attains 10% of its peak value. For records having linear time scales, this is the intersection with the time axis of a straight line drawn through the 10% and 90% reference points on the front.

24.5 *Time to half-value* T_2

The time to half-value T_2 of an impulse current is a virtual parameter defined as the time interval between the virtual origin O_1 and the instant at which the current has decreased to half the peak value.

24.6 *Duration of peak of a rectangular impulse current* T_d

The duration of the peak of a rectangular impulse current T_d is a virtual parameter defined as the time during which the current is greater than 90% of its peak value (see figure 14b).

24.7 *Total duration of a rectangular impulse current* T_t

The total duration of a rectangular impulse current T_t is a virtual parameter defined as the time during which the current is greater than 10% of its peak value (see figure 14b). If oscillations are present on the front, a mean curve should be drawn in order to determine the time at which the 10% value is reached.

25 Test current

25.1 *Standard impulse currents*

Four standard impulse currents corresponding to the first type of impulse, defined in 24.1, are used.

— 1/20 impulse:	front time:	1 µs;	time to half-value:	20 µs;
— 4/10 impulse:	front time:	4 µs;	time to half-value:	10 µs;
— 8/20 impulse:	front time:	8 µs;	time to half-value:	20 µs;
— 30/80 impulse:	front time:	30 µs;	time to half-value:	80 µs;

Rectangular impulse currents have duration of the peak T_d of 500 µs, 1000 µs or 2000 µs or between 2000 µs and 3200 µs.

25.2 *Tolerances*

If not otherwise specified by the relevant Technical Committee, the following differences are accepted between the specified values for standard impulse currents and those actually recorded:

For 1/20, 4/10, 8/20 and 30/80 impulses:

peak value	± 10%
front time T_1	± 10%
time to half-value T_2	± 10%

A small overshoot or oscillations are tolerated provided that their single peak amplitude in the neighbourhood of the peak of the impulse is not more than 5% of the peak value. Any polarity reversal after the current has fallen to zero shall not be more than 20% of the peak value.

For rectangular impulses:

peak value	+20%;	–0%
duration of the peak	+20%;	–0%

An overshoot or oscillations are tolerated provided that their single peak amplitude is not more than 10% of the peak value. The total duration of a rectangular impulse shall not be larger than 1,5 times the duration of the peak and the polarity reversal should be limited to 10% of the peak value.

25.3 *Measurement of the test current*

The test current shall be measured by a device which has passed the approval procedure referred to in IEC Publication 60-3.

25.4 *Measurement of voltage during tests with impulse current*

Voltages developed across the test object during tests with high impulse currents should be measured by a device which has passed the approval procedure given in IEC Publication 60-3 for the measurement of impulse voltages.

NOTE — The impulse current may induce appreciable voltages in the voltage measuring circuit, causing significant errors. As a check, it is therefore recommended that the lead that normally joins the voltage divider to the live end of the test object should be disconnected from this point and connected instead to the earthed end of the test object, but maintaining approximately the same loop. Alternatively, the test object may be short-circuited or replaced by a solid metal conductor. The test circuit geometry should be modified until the voltage measured when the generator is discharged under any of these conditions is negligible in comparison with the voltage across the test object, at least during the part of the impulse which is of importance for evaluating the test results.

Section 9: Combined and Composite Tests

26 Combined voltage tests

A combined voltage test is one in which two separate sources, generating voltages against earth, are connected to two terminals of the test object, (for example an open circuit breaker, see figure 15a). In such a test any two of lightning impulse, switching impulse, direct or power frequency alternating voltages may be combined.

The test voltage is characterized by its amplitude, a time delay Δt and by the waveshape, peak value and polarity of each component.

When combined voltage tests are performed on switchgear they are intended to simulate conditions where one terminal of the open switch is energized at the specified power frequency voltage, and the other terminal is subjected to either a lightning or switching overvoltage. The test circuit shall simulate this situation on both internal and external insulation. In special cases the relevant Technical Committee may permit power-frequency voltages to be simulated by switching impulses of suitable shape.

26.1 *Value of the test voltage* U

The value of the test voltage U is the maximum potential difference between the energized terminals of the test object (see figure 15b).

26.2 *Time delay* Δt

The time delay Δt of a combined voltage is the time interval between the instants when its components reach their peak values, measured from the instant of a negative peak (see figure 20). It has a tolerance of $\pm 0{,}05 T_{p\,max}$, where T_p is the time to peak or the front time for an impulse and a quarter cycle for an alternating voltage, and $T_{p\,max}$ is the larger of the values of T_p for the two components.

Two voltages of a combined impulse voltage test are said to be synchronous when their time delay Δt is zero, within the prescribed tolerance.

26.3 *Actual voltage shapes*

Due to the coupling between the two generating systems, the shapes and amplitudes of the two components of a combined voltage test differ from those produced by the same sources used separately. They shall therefore be measured in combination, preferably by means of separate measuring systems against earth.

Each measuring system shall be suitable for measuring the waveshape of both of the components in order to avoid errors in recording their mutual influence.

The maximum permissible deviations from the prescribed voltage shape shall be specified by the relevant Technical Committee.

NOTE — It should be taken into account that in the case of a disruptive discharge occurring in a combined voltage test, both the voltage sources will act directly against each other if there are no additional protective elements (e.g., resistors or protective gaps) in the circuit. In any case the voltage distribution between the two voltage sources will change completely when there is a disruptive discharge.

26.4 *Arrangement of the test object*

The arrangement of the test object, particularly with respect to the earthed structures shall be specified by the relevant Technical Committee.

26.5 *Atmospheric correction factors*

In a combined voltage test, the atmospheric correction factors relative to the component of highest value have to be applied to the test voltage value.

27 Composite tests

A composite voltage is the voltage resulting from two different voltage sources suitably connected, applied at one terminal of the test object against earth.

The definition of its parameters is left to the relevant Technical Committee.

NOTE — Composite tests may also be performed by applying voltage and impulse-current sources to the test object.

Appendix A: Statistical Treatment of Test Results

A.1 Classification of tests

Disruptive discharge test procedures can be divided into three classes for the purpose of statistical evaluation.

A.1.1 *Class 1: Multiple-level tests*

In a Class 1 test, m_i substantially equal voltage stresses (e.g., lightning impulses) are applied at each of n voltage levels U_i (i = 1, 2, ..., n). While this procedure is usually employed with impulse voltages, some tests with alternating and direct voltages also fall into this class.

The test results are the n numbers m_i of voltage applications and the corresponding numbers d_i of disruptive discharges at each voltage level U_i.

A.1.2 *Class 2: Up-and-down tests*

In a Class 2 test, n groups of m substantially equal voltage stresses are applied at voltage levels U_i. The voltage level for each succeeding group of stresses is increased or decreased by a small amount ΔU according to the result of the previous group of stresses.

Two testing procedures are commonly used. The withstand procedure, aimed at finding voltage levels corresponding to low disruptive discharge probabilities and the discharge procedure, which finds voltage levels corresponding to high disruptive discharge probabilities. In the withstand procedure, the voltage level is increased by an amount ΔU if no disruptive discharge occurs in a group of m voltage applications, otherwise the voltage level is decreased by the same amount. In the discharge procedure, the voltage level is increased by ΔU if one or more withstands occur, otherwise it is decreased by the same amount.

Where m = 1, the two procedures become identical and correspond to the up-and-down 50% disruptive discharge voltage test.

Tests with other values of m are also used to determine voltages corresponding to other disruptive discharge probabilities. The results are the numbers k_i of stress groups applied at the voltage levels U_i. The first level U_i taken into account is that at which at least two groups of stresses were applied. The total number of useful groups is $n = \Sigma k_i$.

A.1.3 *Class 3: Successive Discharge Tests*

In a Class 3 test, a procedure leading to a disruptive discharge on the test object is applied n times. The test voltage may be increased continuously until a disruptive discharge occurs or held constant at some level until a disruptive discharge is observed. The results are the n values of voltage U_i or time t_i at which the disruptive discharge occurred.

Such tests are made with direct, alternating or impulse voltages. Tests where disruptive discharges occur on the front of the impulse fall into this class.

A.2 Statistical Behaviour of Disruptive Discharge

When p, the probability of a disruptive discharge during a given test procedure, depends only on the test voltage, U, the behaviour of the test object can be characterized by a function $p(U)$ determined by the processes of discharge development. In practice, this function, the disruptive discharge probability function, can be represented mathematically by expressions depending on at least two parameters U_{50} and z. U_{50} is the 50% discharge voltage for which $p(U) = 0{,}5$ and z is the conventional deviation; $z = U_{50} - U_{16}$ where U_{16} is the voltage for which $p(U) = 0{,}16$.

NOTE 1 — Examples of $p(U)$ can be derived from the Gaussian (or Normal), the Weibull or the Gumbel probability distribution functions. Experience shows that for $0{,}15 < p < 0{,}85$ most theoretical distributions can be considered equivalent. Special Weibull or Gumbel distributions are acceptable approximations to a Gaussian distribution having given U_{50} and z for p lying between 0,02 and 0,98. Beyond these limits little information is available.

NOTE 2 — Sometimes p is a function of two or more parameters, e.g., U and dU/dt. In such cases no simple function can be used to describe p. Details of such cases may be found in the technical literature.

The function $p(U)$ and the parameters U_{50} and z can be found from tests with very large numbers of voltage applications, provided that the characteristics of the test object remain constant throughout the tests.

In practice the number of voltage applications is usually limited and the estimates of U_{50} and z based on an assumed form of $p(U)$ will be subject to statistical uncertainties.

A.2.1 *Confidence limits and statistical error*

If a parameter y is estimated from n test results, upper and lower confidence limits y_U and y_L can be defined, with the probability C that the true value of y is within these limits. C is termed the confidence level and the half width $e_t = (y_U - y_L)/2$ of the confidence band is called the statistical error.

Usually C is taken as 0,95 (or 0,90) and the corresponding limits are called the 95% (or 90%) confidence limits.

The statistical error e_t depends on both n and the value of the conventional deviation z. The conventional deviation z should be estimated when possible from tests made under realistic conditions. In general, the larger the number of tests made, the better will be the estimate of z. It should, however, be remembered that during a protracted test series, ambient conditions may change to an extent which offsets the gain in accuracy from the increased number of tests.

Since accurate estimation of z from a limited series of tests is not possible, values estimated from the pooled results of many tests are often given by the relevant Technical Committees.

The statistical error e_t may be combined with estimates of other errors (e.g., measuring errors) to define the overall error limits for the determination of a particular parameter.

A.3 Analysis of Test Results

This Clause is applicable to cases where the results of tests can be regarded as independent estimates, i.e., where the nth result is not influenced by what may have occurred in the $(n-1)$th or $(n-j)$th tests.

A.3.1 *Treatment of Results from Class 1 Tests*

In this case the discharge frequency $f_i = d_i / m_i$ at a voltage level U_i is taken as an estimate of $p(U_i)$ the discharge probability at the voltage level U_i. The n estimates of $p(U_i)$ obtained in a Class 1 test can then be fitted to an assumed probability distribution function $p(U)$ and the parameters U_{50} and z determined.

This may be done by plotting f_i versus U_i on special graph paper designed to give a straight line plot when the probability estimates conform to a particular probability distribution function $p(U)$. A well-known example is Gaussian or Normal probability paper which yields a straight line plot for estimates conforming to the Gaussian distribution function:

$$p(U) = (1 / z\sqrt{2\pi}) \int_{-\infty}^{U} \exp[-(u - U_{50})^2 / 2z^2]\, du$$

NOTE — Normal probability papers do not have ordinate scales embracing the values $p = 0$ or $p = 1$. Accordingly, tests at voltage levels causing all discharges $d_i = m_i$ or no discharges $d_i = 0$ cannot be plotted directly. A possible way of using these results is to combine them with values obtained for an adjacent voltage level and to plot them as the weighted mean voltage.

Alternatively analytical fitting techniques involving the least-squares method or likelihood methods (see A.4) may be used to find U_{50}, z and the confidence limits of these estimates.

In any case adequate methods (such as conventional regression coefficients or confidence limits) should be used to check if the assumed probability function fits the measured points with sufficient accuracy. Reference is made to the relevant technical literature.

As a general guide the statistical error tends to vary inversely as the square root of the number of voltage applications at each level m_i and inversely as the number of levels used n. Note also that if all values of f_i differ from zero and unity, with 10 voltage applications ($m = 10$) at each of five levels ($n = 5$) the 95% confidence limits would be:

For U_{50}:

$$(U_{50}^* - 0{,}75\, z^*) \leq U_{50} \leq (U_{50}^* + 0{,}75 z^*)$$

and for z:

$$0{,}4 z^* \leq z \leq 2{,}0 z^*$$

where U_{50}^* and z^* are the estimates of U_{50} and z obtained by fitting the test results to an assumed discharge probability distribution function $p(U)$. In addition the statistical error tends towards lower values for estimates of U_p in the vicinity of $p = 0{,}5$ or 50%.

A.3.2 *Treatment of results from Class 2 Tests*

A Class 2 test provides an estimate of U_p, the voltage at which the disruptive discharge probability is p. U_p^*, the estimate of U_p, is given by:

$$U_p^* = \sum(k_i U_i)/n$$

where k_i is the number of groups of stresses applied at the voltage level U_i. For a more accurate formula see the technical literature.

To avoid appreciable errors, the lowest voltage level taken into account should not differ from U_p^* by more than $2\Delta U$.

The withstand procedure described in A.1.2 provides an estimate of U_p for a disruptive discharge probability p given by:

$$p = 1 - (0{,}5)^{1/m}$$

while the discharge procedure gives U_p for:

$$p = (0{,}5)^{1/m}$$

The values of p for which U_p can be estimated in up and down tests are limited by the requirement that m be an integer. Examples are given in Table A1.

Table A1

m =	70	34	14	7	4	3	2	1	
p =	0,01	0,02	0,05	0,10	0,15	0,20	0,30	0,50	(withstand procedure)
p =	0,99	0,98	0,95	0,90	0,85	0,80	0,70	0,50	(discharge procedure)

Procedures for estimating z and its confidence limits are also available but are not recommended for general use.

A.3.3 *Treatment of Results from Class 3 Tests*

The result of a Class 3 test is usually a series of n voltages U_i from which parameters U_{50} and z of a disruptive discharge probability function are to be determined. For a Gaussian (or Normal) distribution, estimates of the parameters U_{50} and z are given by:

$$U_{50}^* = \sum U_i / n$$

$$z^* = \left[\sum (U_i - U_{50}^*)^2/(n-1)\right]^{1/2}$$

For other distributions likelihood methods can be employed to estimate U_{50} and z (see A.4). The same expressions and methods apply in cases where times to the occurrence of a disruptive discharge t_i are to be analyzed.

The confidence limits for Gaussian distributions may be found using the Student's t or Chi-squared distributions as described in the technical literature.

As an example, in the case of a Gaussian distribution, the 95% confidence limits for the estimates of U_{50} and z obtained from a test with $n = 20$ are:

$$(U_{50}^* - 0{,}47z^*) \leq U_{50} \leq (U_{50}^* + 0{,}47z^*)$$

and

$$0{,}76z^* \leq z \leq 1{,}46z^*$$

A.4 Application of likelihood methods

Likelihood methods may be used for the analysis of the results of all of the above classes of tests. These methods permit estimation of U_{50} and z and hence U_p once a discharge probability distribution function $p\,(U\,;\,U_{50},\,z\,)$ is selected.

Furthermore, it is possible to use all the results obtained and the confidence limits corresponding to any desired confidence level C can be found.

A.4.1 *The likelihood function*

For Class 1 and Class 2 tests the numbers of discharges, d_i, and the numbers of withstands w_i found at each voltage level U_i are known. If the form of the discharge probability distribution function $p\,(U\,;\,U_{50},\,z\,)$ is known or assumed, the probability of a discharge at the level U_i is $p\,(U_i\,;\,U_{50},\,z\,)$ and the probability of a withstand is $(\,1 - p(U_i\,;\,U_{50}\,,\,z\,))$. The likelihood function L_i corresponding to d_i discharges and w_i withstands occurring at a voltage level U_i is then:

$$L_i = p\,(U_i\,;\,U_{50}\,,\,z)^{d_i}\,(1 - p\,(U_i\,;\,U_{50},\,z))^{w_i}$$

As U_i, d_i and w_i are known, L_i is a function of U_{50} and z only.

The likelihood of a complete set of results embracing n values of U_i then becomes:

$$L = L_1 L_2 \ldots L_i \ldots L_n = L\,(U_{50},\,z)$$

For Class 3 tests each voltage level U_i which appears in the results, corresponds to a disruptive discharge. In general, a voltage level U_i will appear m_i times where $m_i \geq 1$. The likelihood L then becomes:

$$L = f(U_1; U_{50}, z)^{m_1} f(U_2; U_{50}, z)^{m_2} \ldots f(U_m; U_{50}, z)^{m_m}$$

where

$$f = \mathrm{d}p/\mathrm{d}u$$

Methods for calculating L from extensive sets of results by considering groups of results lying in a number of voltage intervals can be found in the literature.

A.4.2 *Estimation of* U_{50} *and* z

The best estimates of U_{50} and z are the values U_{50}^* and z^* which maximize L.

These are frequently found by using a computer to make repeated calculations of L for assumed values of U_{50}^* and z^*. With U_{50}^* and z^* fixed, U_p corresponding to any desired value of discharge probability, p, can be found from the assumed discharge probability distribution function with $U_{50} = U_{50}^*$ and $z = z^*$. Methods for determining the confidence limits of U_{50}^* and z^* are to be found in the literature. For the case of $C = 0{,}9$ the equation $L(U_{50}; z) = 0{,}1L_{max}$ permits determination of these confidence limits.

Appendix B: Pollution Test Procedures

B.1 Production of salt fog

B.1.1 *Preparation of salt solution*

The salt solution should be made to the required salinity from salt (NaCl of commercial purity) and ordinary tap water. The concentration should be within ±5% of one of the following values: 2,5 g, 3,5 g, 5 g, 7 g, 10 g, 14 g, 20 g, 28 g, 40 g, 56 g, 80 g, 112 g, 160 g or 224 g per litre of solution.

The concentration may be determined by measuring the resistivity or the density of the salt solution. Figures 16 and 17 give the values of the resistivity and the density, respectively, as functions of the salt concentration at 10°C, 20°C and 30°C.

B.1.2 *Details of spraying system*

The fog is produced in a test chamber by means of a number of jets as shown in figure 18 and described in detail below. Each jet has two nozzles, one acting as an air outlet and the other as an outlet for the salt solution. The compressed air thus flows across the solution nozzle and produces a fine mist of the solution.

The air nozzles should be provided with filtered, oil-free air at 700 kPa above the atmospheric pressure, with a tolerance of ±4%. The solution nozzles should be supplied with the specified salt solution at a pressure adjusted so that the flow of the solution through each nozzle, is 0,5 L/min ±10% for the period of the test; the tolerance on the total flow to all spray jets is ±5% of the nominal value. Consequently, the solution pressure must also be kept constant throughout a test.

The jets are mounted 0,6 m apart in two straight rows, parallel to the centre line of the test object (one on each side), each row being 3 m from it and in the same plane, with the jets in each row directed towards one another. Each row should be extended at least 0,6 m beyond the ends of the insulating section of the test object; the latter is mounted vertically, horizontally or inclined as prescribed by the relevant Technical Committee, but should be so placed that the lowest jet is at least 0,6 m above the floor.

B.2 Pre-deposition of pollution, coating and wetting procedure

B.2.1 *Preparation of coating material*

One of the two following compositions of the suspension should be used:

a) — 100 g Kieselgur (diatomaceous earth, Diatomite),

— 10 g highly-dispersed silicon dioxide, particle size 2–20 µm

— 1000 g demineralized water

The volume conductivity of the suspension shall be adjusted by adding a suitable amount of salt (NaCl) to obtain the value chosen from those of the following table, corresponding to the requested reference layer conductivity. The suspension so formed then shall be applied to the surface of the insulator to produce a layer of appropriate thickness that achieves the reference conductivity.

Reference layer conductivity at 20°C in µS (tolerance: ±15%)	7,5	10	15	20	30	40	60	80
Corresponding volume conductivity values of the prepared suspension at 20°C in mS/cm	2,25	3,0	4,5	6,0	9,0	12,0	8,0	24,0

b) — 40 g Kaolin or Tonoko

— 1000 g demineralized water

The volume conductivity of the suspension shall be adjusted by adding a suitable amount of salt (NaCl) to obtain the requested reference salt deposit density.

The suspension then shall be applied to the surface of the insulator to produce a layer of appropriate thickness that achieves the reference salt deposit density.

B.2.2 *Main characteristics of the inert materials*

Ranges of values for the main characteristics of inert materials, defining the types of Kieselgur, Kaolin and Tonoko that should be used for the suspensions are given in the following table:

Inert material	Weight composition in % of				Granulometry in µm (cumulative distribution)			Volume conductivity at 20°C in µS/cm
	SiO_2	Al_2O_3	Fe_2O_3	H_2O	16%	50%	84%	
Kieselgur	70–90	5–25	0,5–6	7–14	0,1–0,2	0,4–1	2–10	15–200
Kaolin	40–50	30–40	0,3–2	7–14	0,1–0,2	0,4–1	2–10	15–200
Tonoko	60–70	10–20	4–8	—	0,8–1,5	3–5	8–15	20–100

B.2.3 *Solid coating and wetting procedure*

The suspension may be deposited on the clean surface of the test object by dipping, spraying or flow-coating. The resulting layer should be uniformly distributed as far as possible over the whole of the insulating surface of the test object.

The coating shall be dried out before starting the test.

B.3 Measurement of the degree of pollution

The degree of pollution on the surface of a test object can be determined either by the method given in B.3.1 or by the method given in B.3.2.

B.3.1 *Surface conductivity of the insulating surface*

To determine the surface conductivity of the surface, the leakage conductance G_s is measured between two bare electrodes on the test object. From this conductance the surface conductivity is calculated using a form factor derived from the geometry of the insulating surface, see below.

To give consistent results, the voltage used for the conductance measurement should be about 2 kV/m of leakage path.

The surface conductivity K_s is found from:

$$K_s = G_s f$$

where f is the form factor given by:

$$f = \int_0^L \frac{dx}{B(x)}$$

where:

L = total length of the leakage path

dx = length of an element of the leakage path, at a distance x from one electrode ($0 \leq x \leq L$).

$B(x)$ = breadth or circumference of the leakage path at distance x.

The layer conductivity K_s is corrected to 20°C by means of the following formula to give K_{20}.

$$K_{20} = \frac{1,6}{1 + 0,03\theta} K_s$$

where θ is the temperature of the insulator surface in degrees Celsius.

NOTE — that the determination of the surface conductivity from the conductance and the form factor may give incorrect results if the surface conductivity is not reasonably constant along the length of the test object or the measured part of the length.

B.3.2 *Equivalent amount of sodium chloride per square centimetre of the insulating surface (S.D.D. mg/cm²).*

The polluted insulating surface or a certain part of it is washed with distilled water, all of which is carefully collected. The resistivity of the collected water is measured and corrected to 20°C. By means of figure 16 the equivalent quantity C of sodium chloride in grams per litre in the solution is determined. From this,

the equivalent amount m of sodium chloride per unit surface is determined in milligrams per square centimetre by

$$M = CV/A$$

where:

A = the area of the cleaned surface in square centimetres

V = the volume of the collected water in cubic centimetres.

Appendix C: Calibration of a Non-Approved Measurement Device with a Rod/Rod Gap

C.1 General arrangement of a rod/rod gap

The general arrangement of the rod/rod gap shall be as shown in either figure 19a (vertical gap) or figure 19b (horizontal gap).

The rods shall be made of steel or brass, have a square section, with side between 15 mm and 25 mm and have a common axis. The ends shall be cut at right angles to the axis leaving the edges sharp.

The clearance from the tip of the high voltage rod to earthed objects and walls, other than the ground plane, shall be not less than 5 m.

C.2 Reference Values

The disruptive discharge voltage U_0 for positive and negative direct voltage at standard reference atmosphere is given, for either the vertical or the horizontal gap by:

$$U_0 = 2 + 0{,}534\,d \qquad \text{(C-1)}$$

where U_0 is in kilovolts

and d is the gap spacing in millimetres

Equation (C-1) is valid for:

$$250 \text{ mm} \leq d \leq 2500 \text{ mm}$$

$$1 \text{ g/m}^3 \leq h/\delta \leq 13 \text{ g/m}^3$$

Under these conditions the measurement uncertainty is estimated to be less than ±3%.

The rod/rod gap shall not be used as an approved measuring device at gap spacings less than 250 mm because of the absence of streamer pre-discharges. There is no experimental evidence to support its use at gap spacings greater than 2500 mm.

C.3 Calibration Procedure

The spacing, d, between the rods shall be set and the voltage applied and raised so that the time interval between 75% and 100% of the disruptive discharge voltage is about 1 min.

Ten readings of the voltage at the instant of sparkover shall be taken with the non-approved measuring device under calibration. The voltage, at standard reference atmosphere, corresponding to the mean of these ten values is given by Eqn. (C-1). This voltage shall be corrected for the actual atmospheric conditions in accordance with 11.2.

Figures

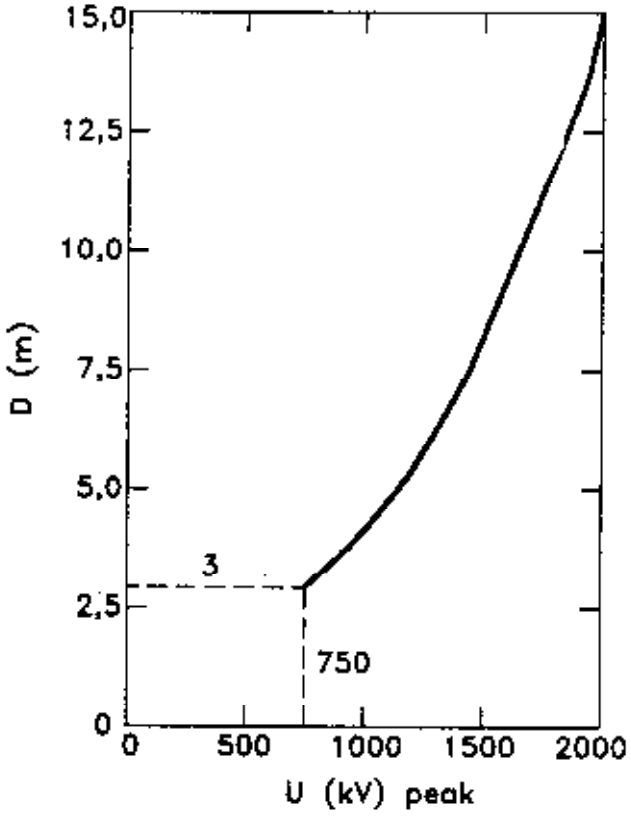

Figure 1 .... Minimum clearance *D* of extraneous live or grounded objects to the energized electrode of a text object, during an a.c. or positive switching impulse test at the maximum voltage *U* applied during test.

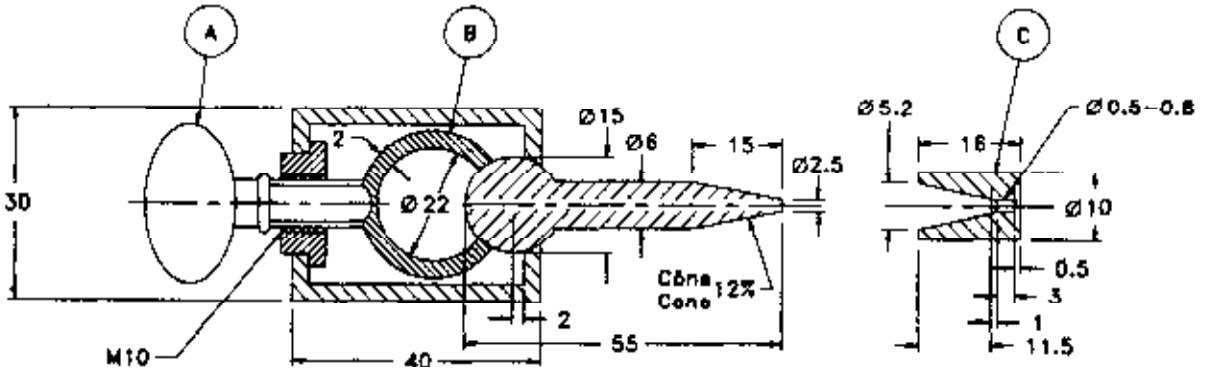

Dimensions in millimetres.

A = nozzle clamping screw
B = water supply pipe
C = replaceable orifice

Figure 2a) Nozzle type I.

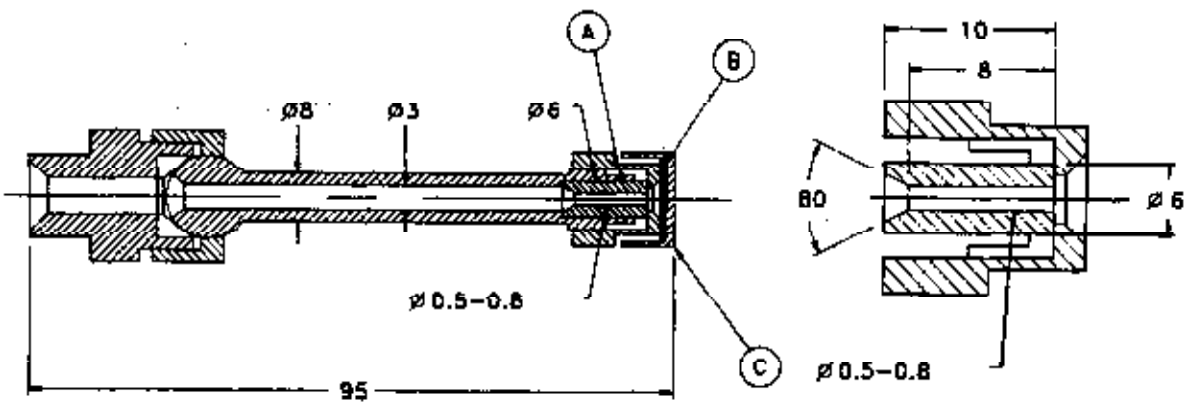

Dimensions in millimetres

A = plastic orifice to reduce the risk of obstruction by dirt
B = rubber seal
C = cover to block water

Figure 2 b) Nozzle type II.

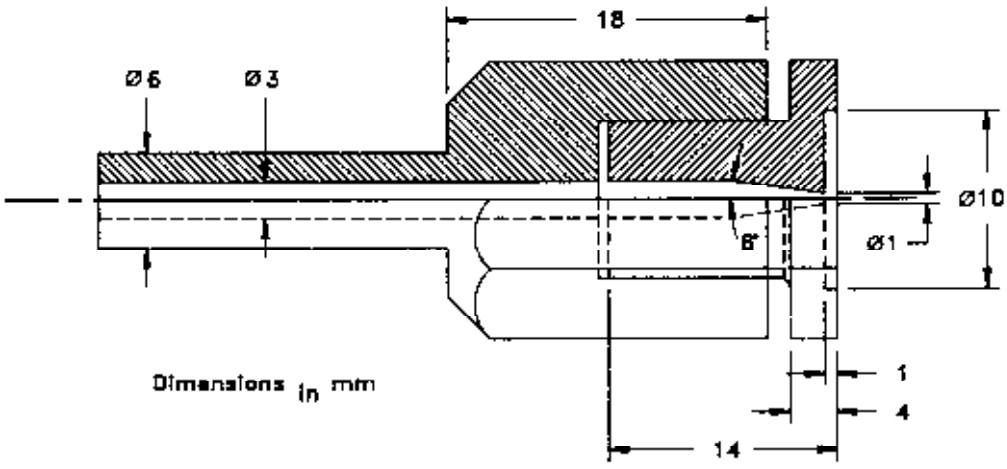

Figure 2 c) Nozzle type III (details of orifice only).

NOTE — The length of water jet which can be obtained depends on the diameter of the orifice and on the water pressure. At the optimum pressure, which usually is 300 kPa – 400 kPa but depends on the smoothness of the orifice and the arrangement of the supplying pipes, the approximate jet lengths obtainable with the nozzles shown in Figures 2a to 2d are given in the following table :

Type of nozzel	Orifice diameter mm	Length of water jet m
I et II	0,5	4
I and II	0,8	6
III	1,0	10
(Conical)	1,0	9–11

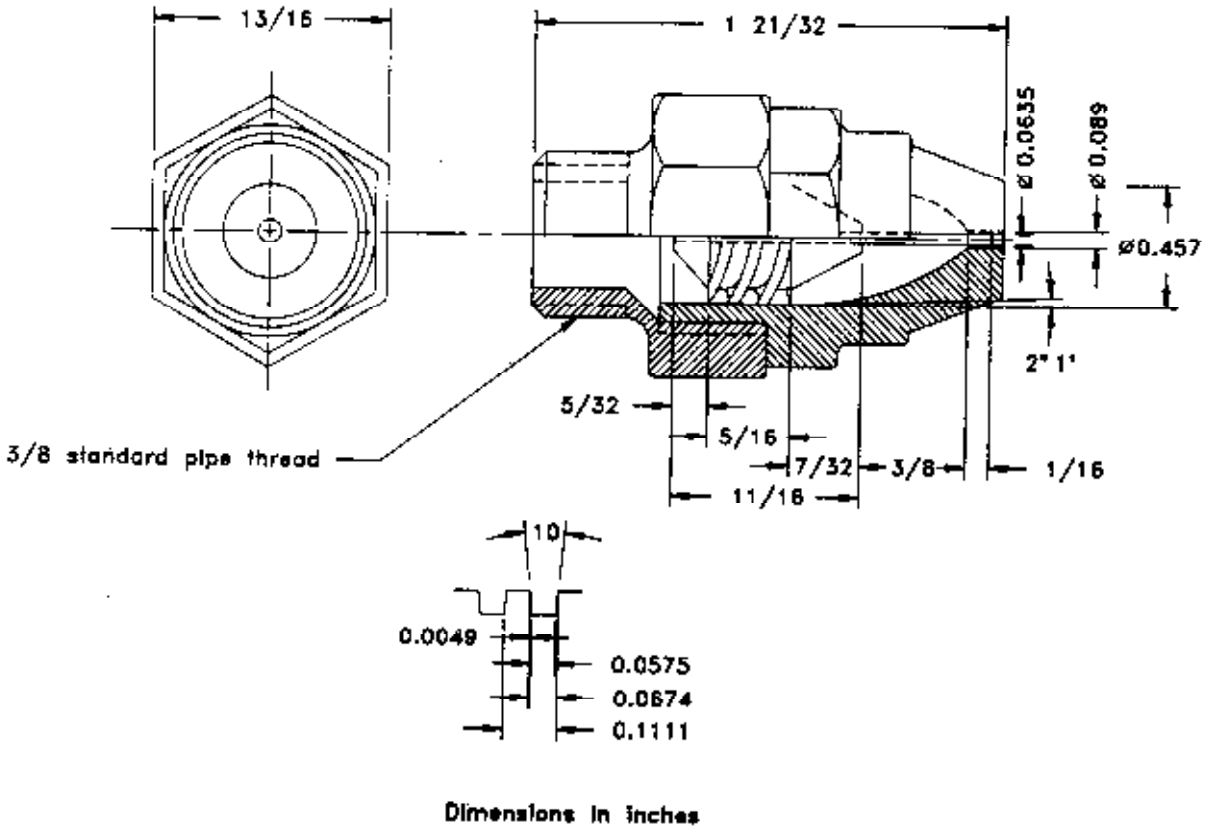

Figure 2 d) Nozzle type IV (American practice).

NOTE — The nozzle type IV in Figure 1d (for American practice) has a concentric orifice with dimensions given in the figure. With water pressure of 250 kPa – 450 kPa, it gives jet lengths of 2 m to 3 m.

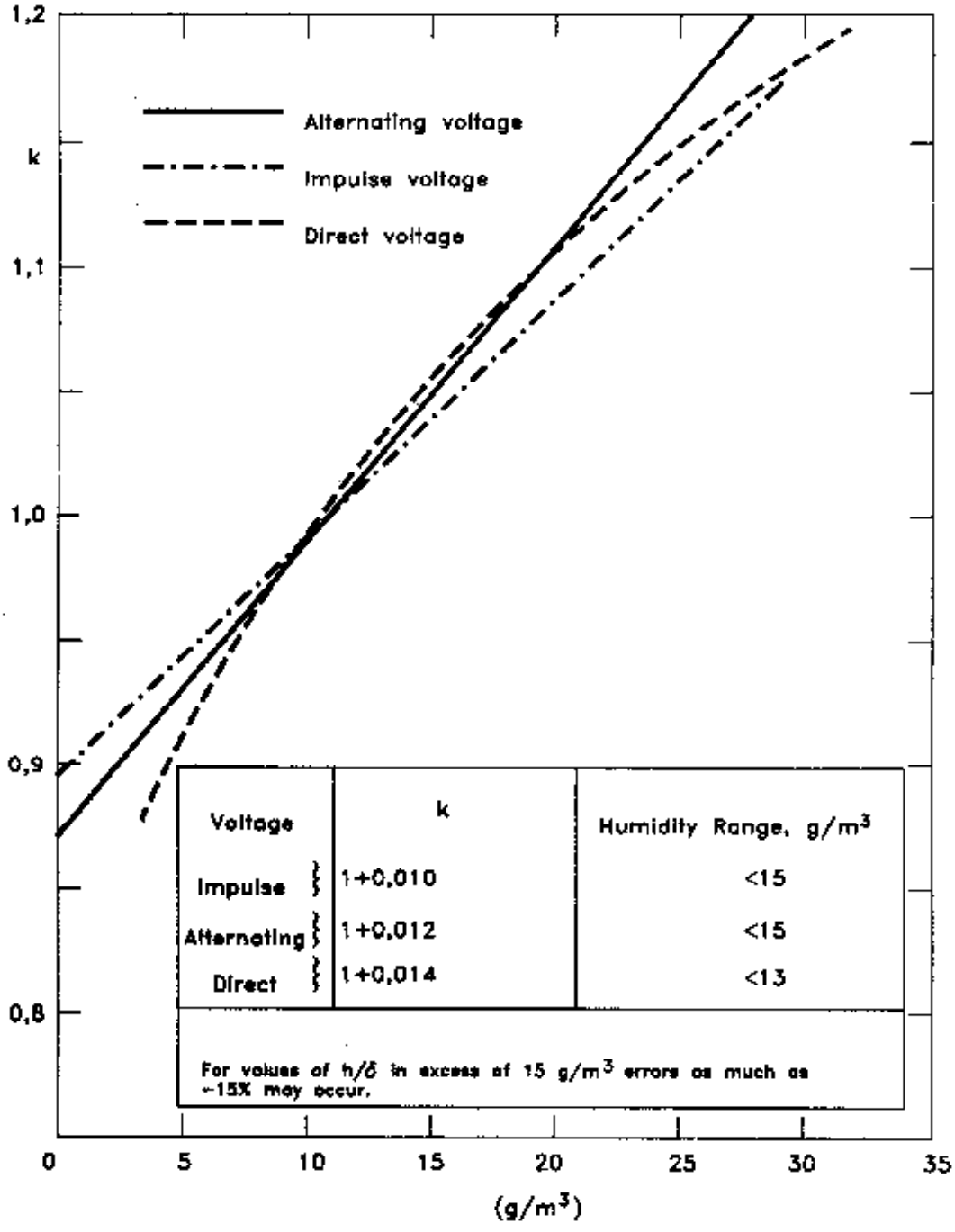

Voltage	k	Humidity Range, g/m³
Impulse	1+0,010	<15
Alternating	1+0,012	<15
Direct	1+0,014	<13

For values of h/δ in excess of 15 g/m³ errors as much as ±15% may occur.

Figure 3 — k as a function of the ratio of absolute humidity h to the relative air density δ.

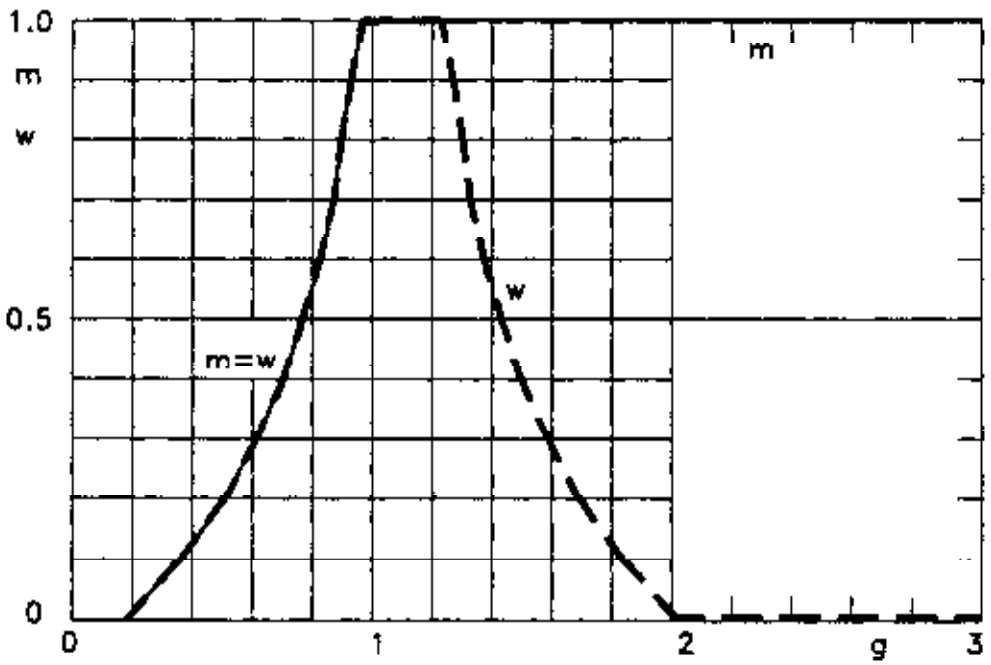

Figure 4 Values of exponents m for air density correction and w for humidity correction as a function of parameter g: see 11.2.3

NOTE — The values of exponents m and w have been deduced from experimental values obtained in different conditions. However, they are limited to altitudes above the sea level of less than 2000 m.

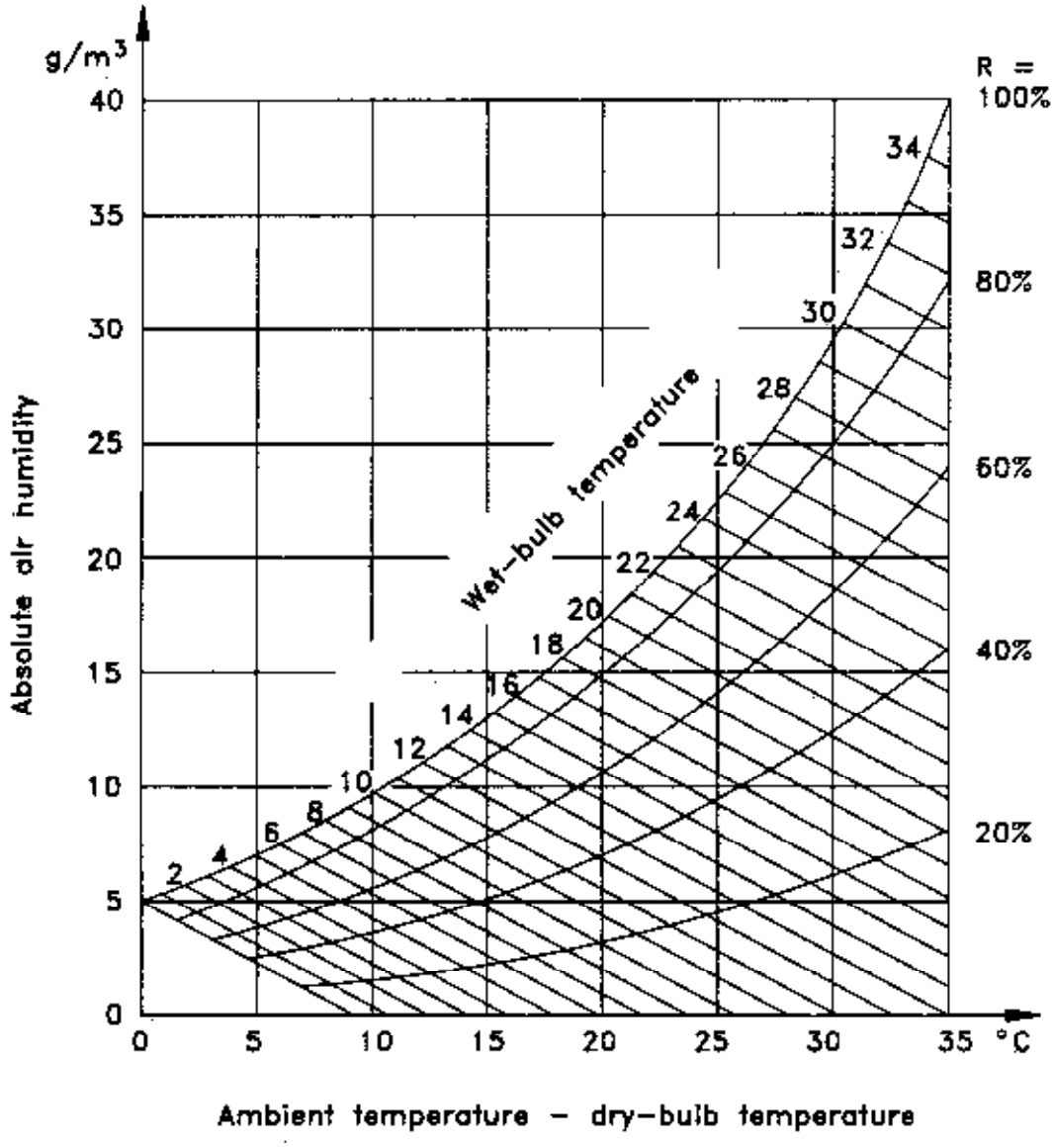

Figure 5 Absolute humidity of air as a function of dry- and wet-bulb thermometer readings; see 11.5. Curves of relative humidity are also given.

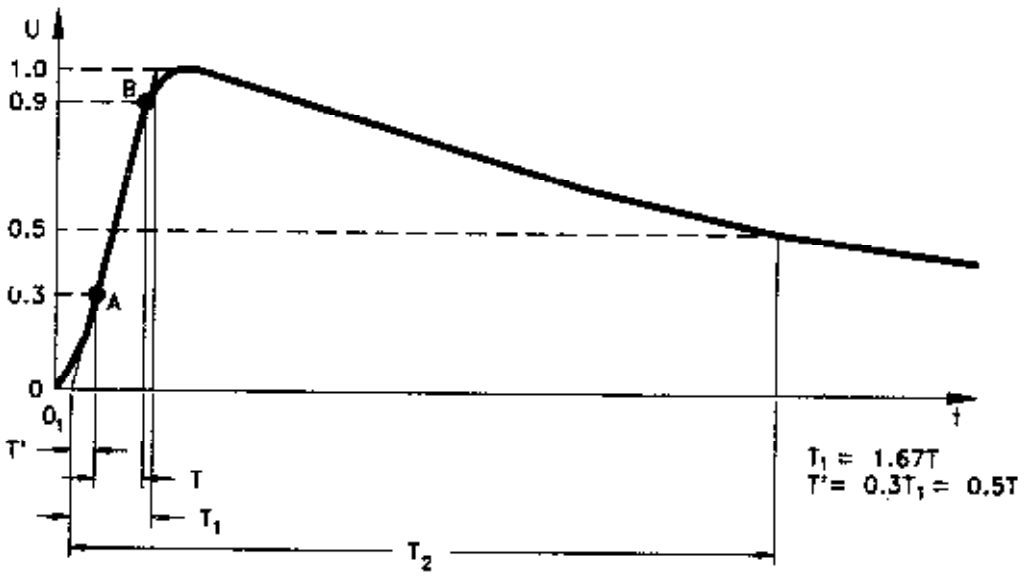

Figure 6 Full lightning impulse.

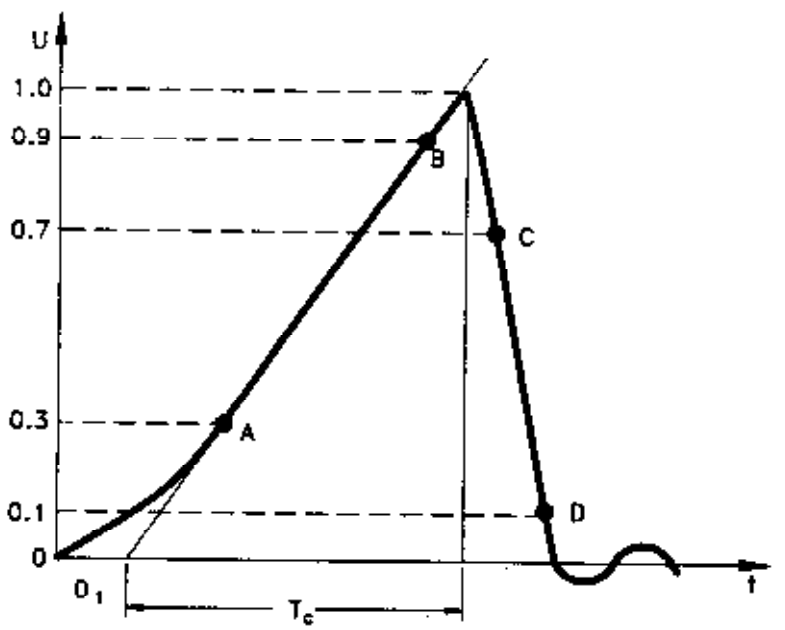

Figure 7 Lightning impulse chopped on the front.

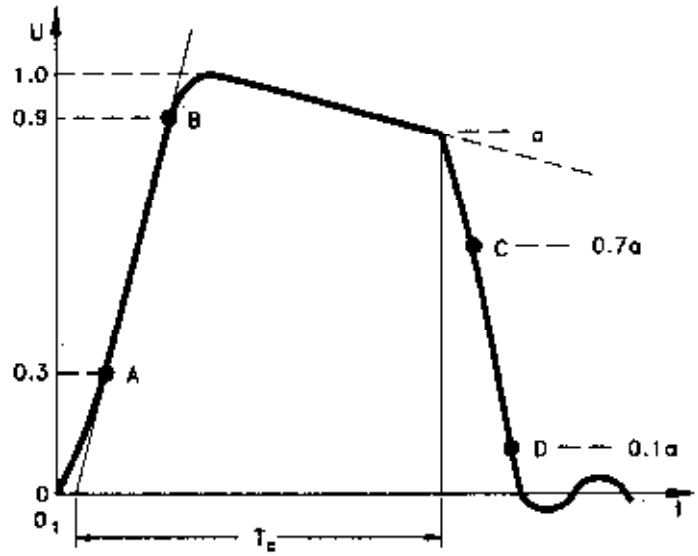

Figure 8 Lightning impulse chopped on the tail.

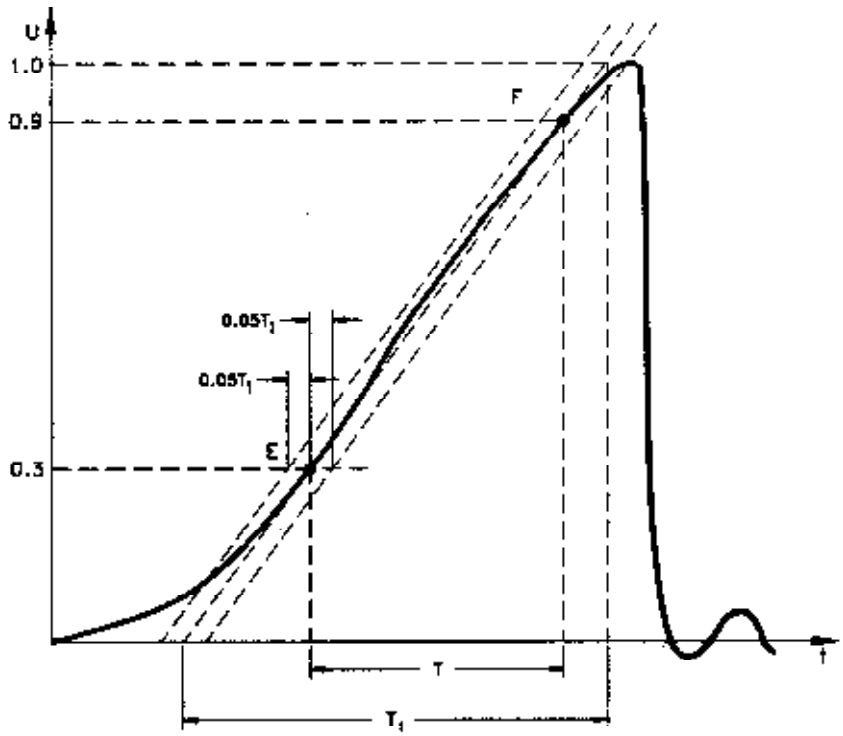

Figure 9 - Linearly rising front chopped impulse.

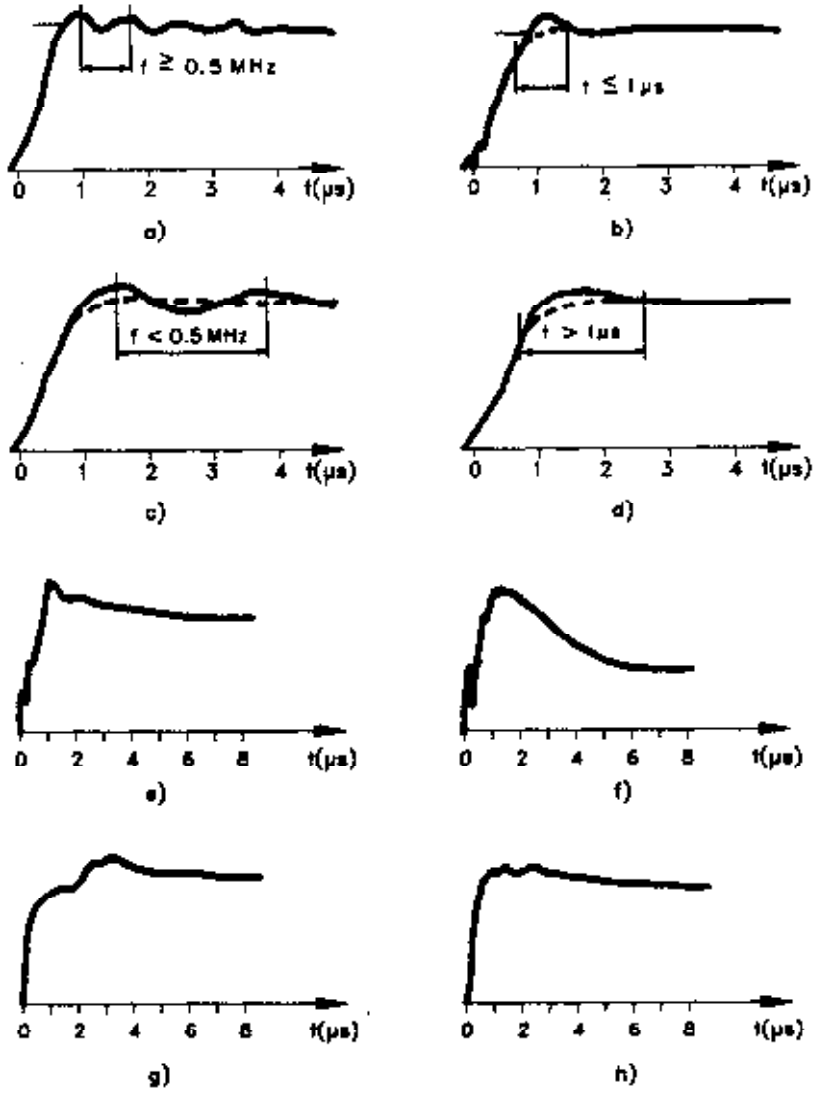

Figure 10.... Examples of lightning impulses with oscillations or overshoot.

a,b The value of the test voltage is determined by a mean curve (broken line).
c,d The value of the test voltage is determined by the crest value.
e,f,g,h No general guidance can be given for the determination of the value of the test voltage.

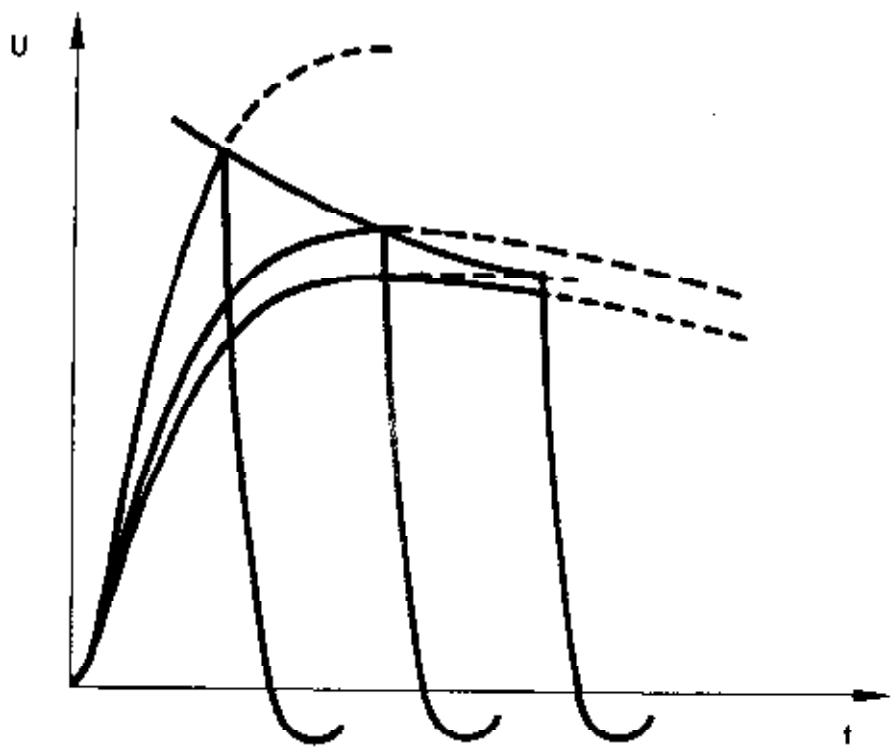

Figure 11 Voltage/time curve for impulses of constant prospective shape.

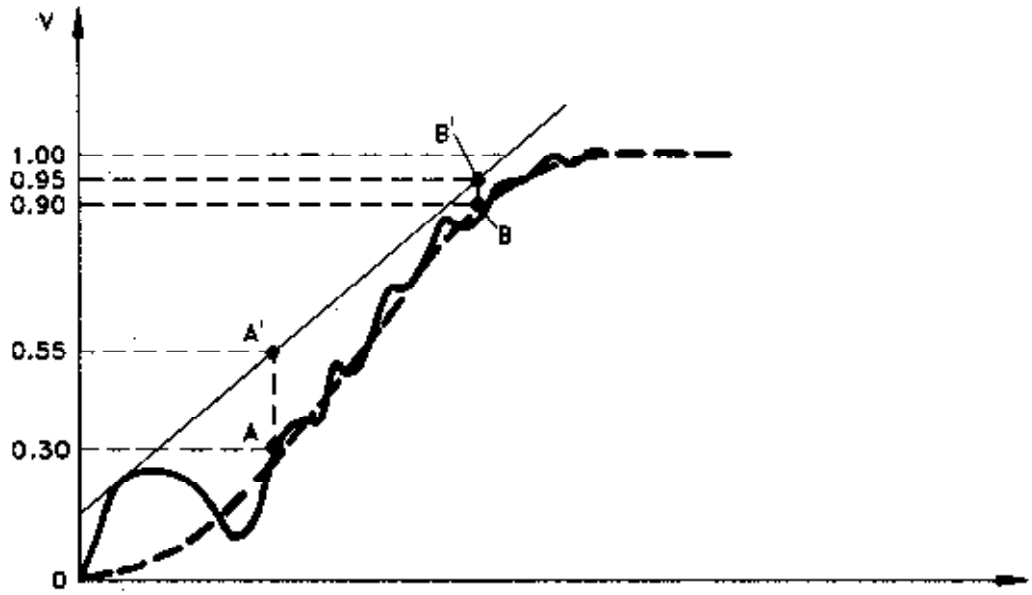

Figure 12 — "Maximum permissible amplitude of oscillations on the wave-front".

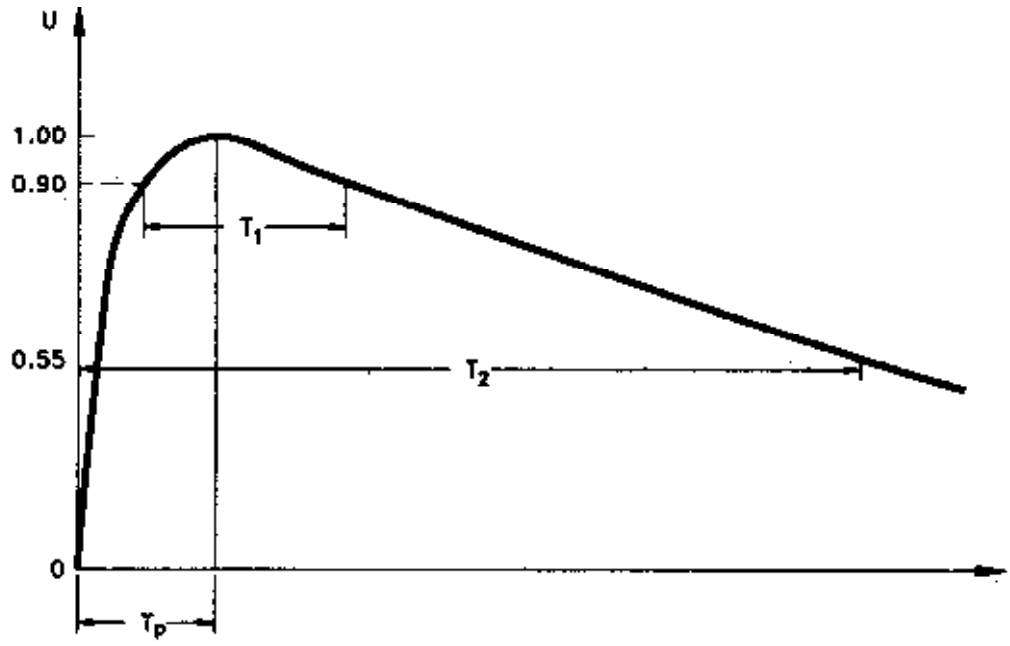

Figure 13 Full switching impulse.

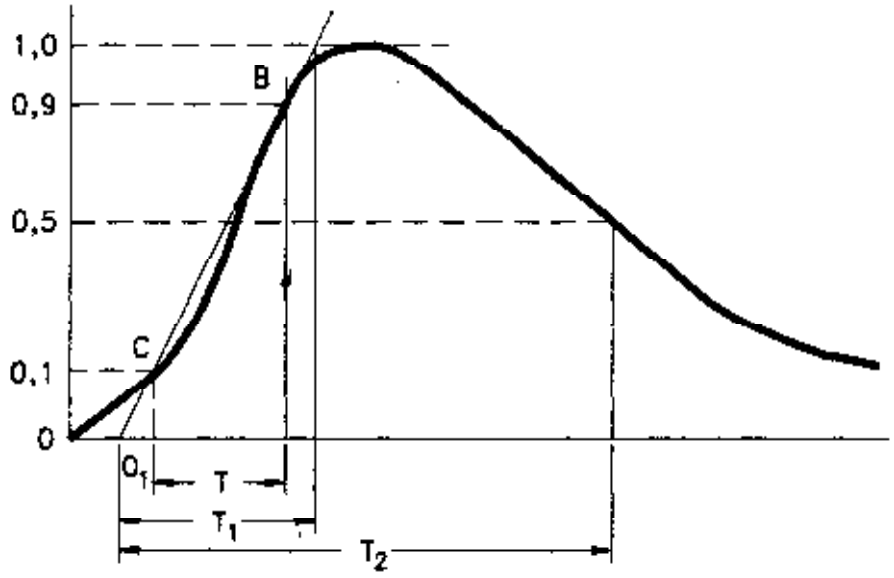

Figure 14 a) Impulse current — Exponential.

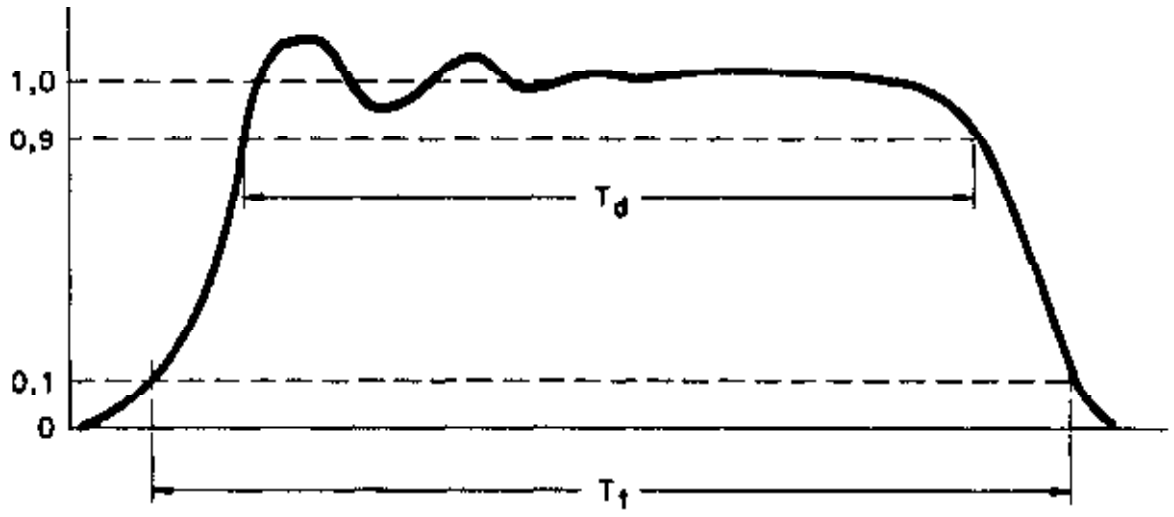

Figure 14 b) Impulse current — Rectangular.

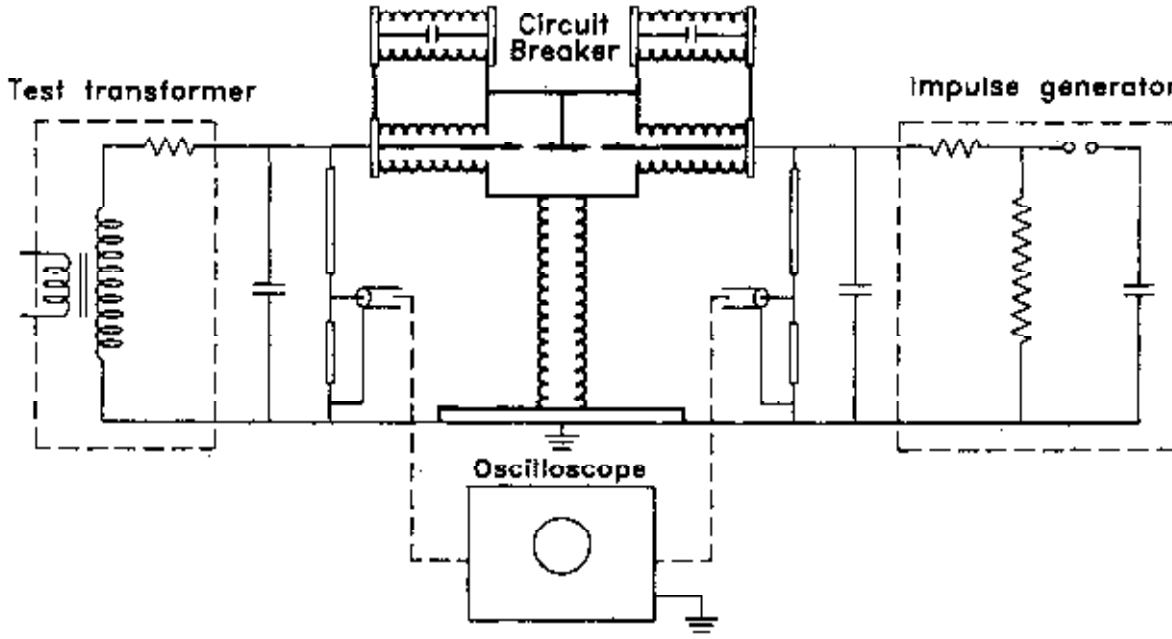

Figure 15 a) Example of test circuit for combined voltage tests.

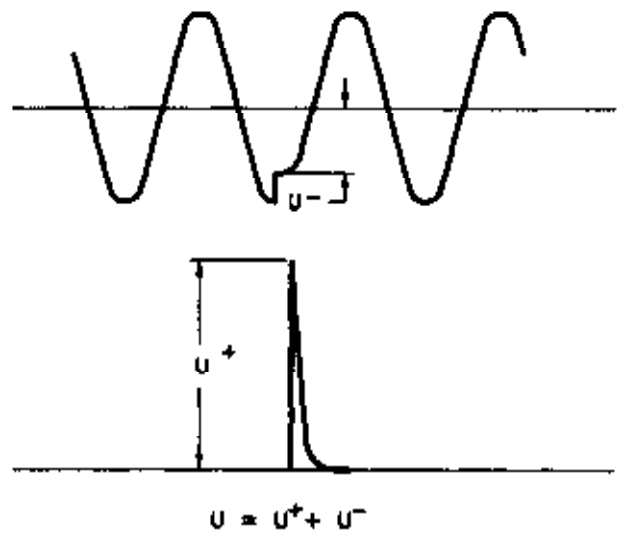

Figure 15 b) Example of voltage waves during combined voltage tests giving value of test voltage *U*.

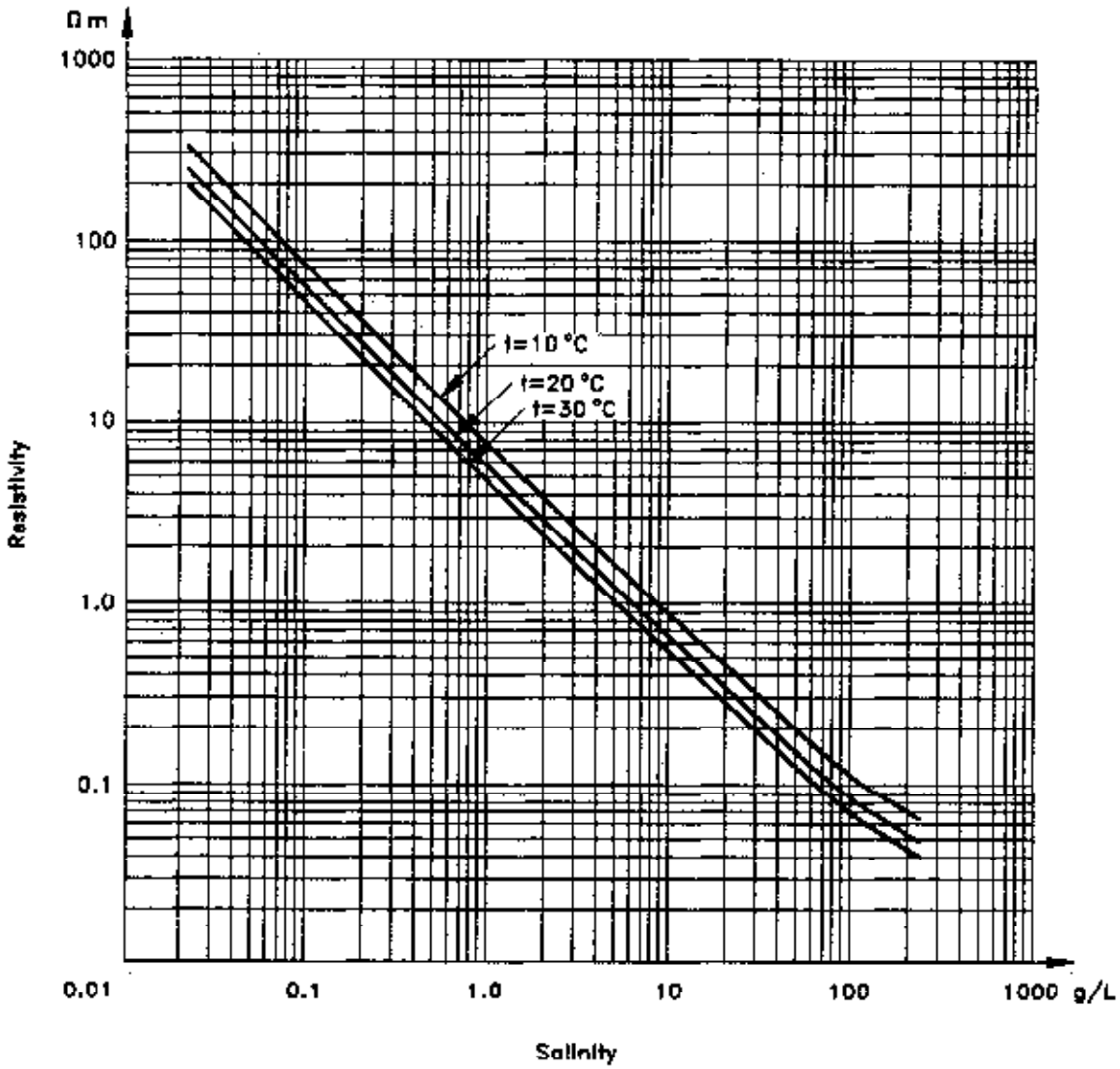

Figure 16 Resistivity of a solution of sodium chloride (NaCl) in water, as a function of salinity at solution temperature t of 10°C, 20°C, and 30°C.

NOTE — The salinity is expressed in grams per litre as determined at a temperature of 20°C.

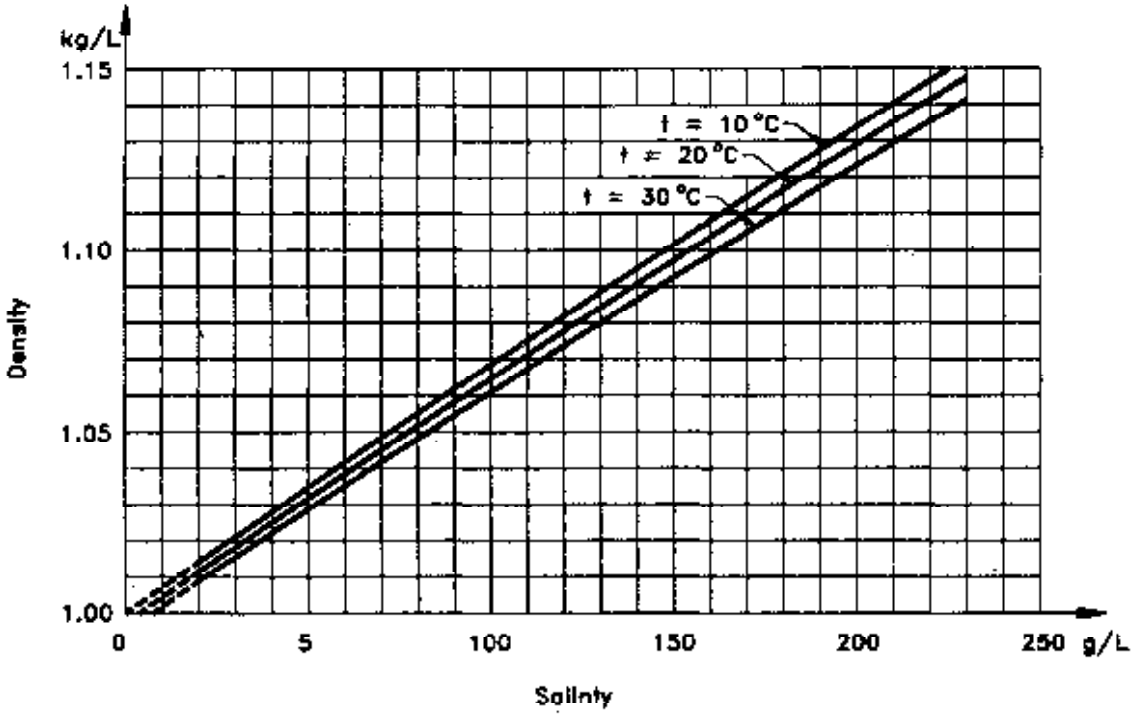

Figure 17 Density of solution of sodium chloride (NaCl) in water, as a function of salinity at solution temperature t of 10°C, 20°C, and 30°C.

NOTE — The salinity is expressed in grams per litre as determined at a temperature of 20°C.

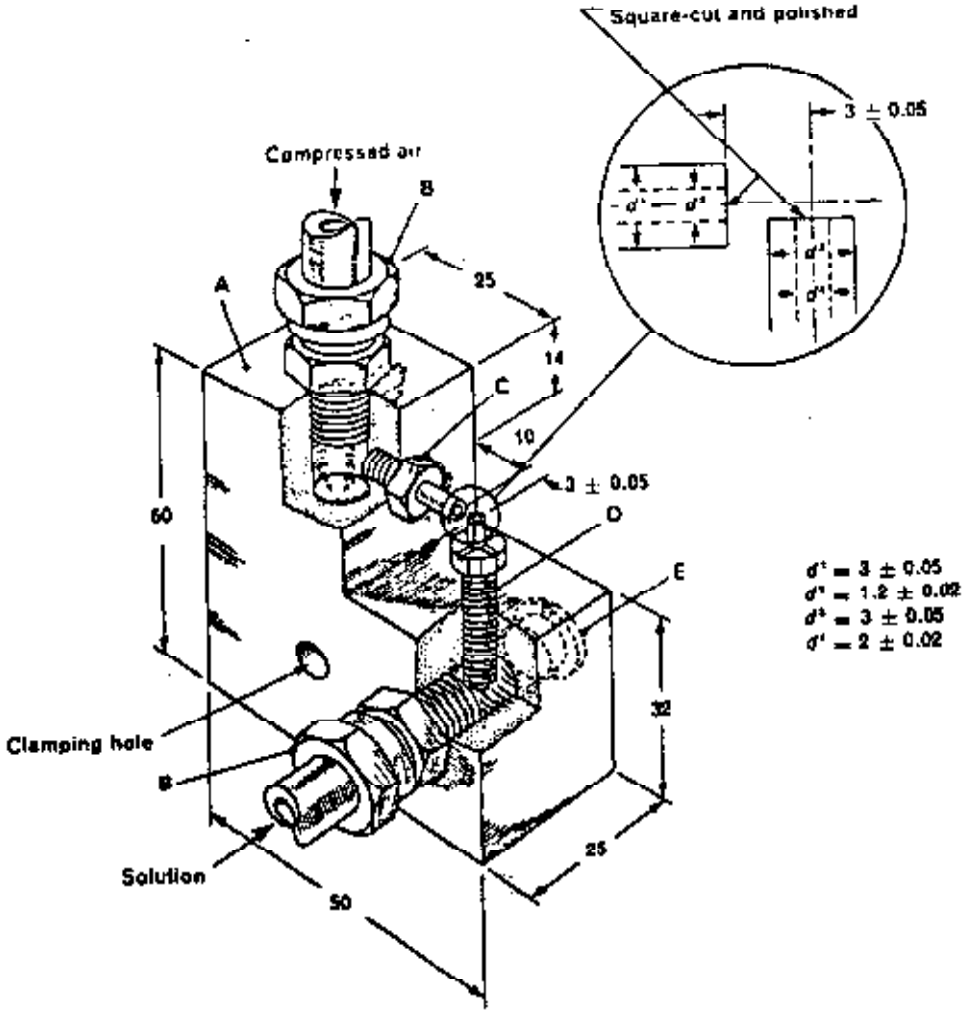

Dimensions in millimetres

A = perspex body

B = standard coupling for 8 mm nominal bore tube (stainless steel)

C = stainless steel (6 mm nominal SI thread with 1,6 mm bore tube)

D = nylon (6 mm nominal SI thread, 16 mm long screw with concentric stainless steel tube)

E = perspex plug

Figure 18 Saline fog jet; see Appendix A.

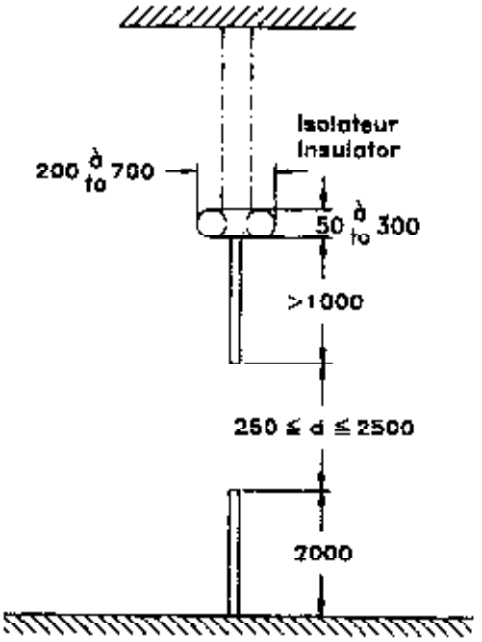

Figure 19 a) Vertical arrangement of rod/rod gap.

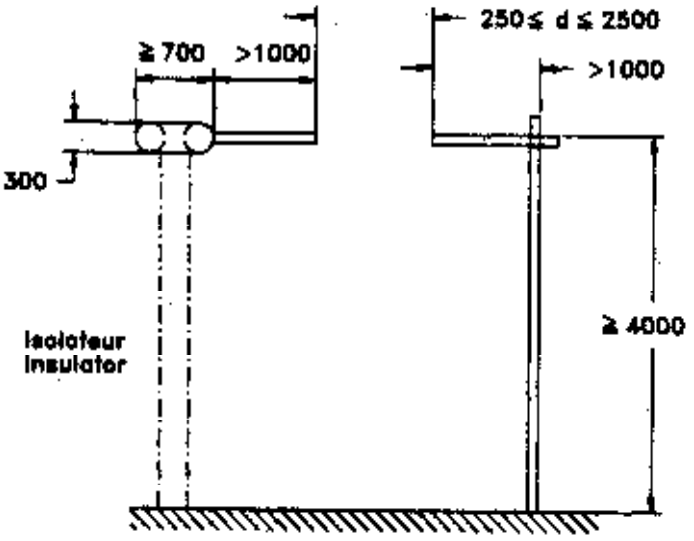

Figure 19 b) Horizontal arrangement of rod/rod gap.

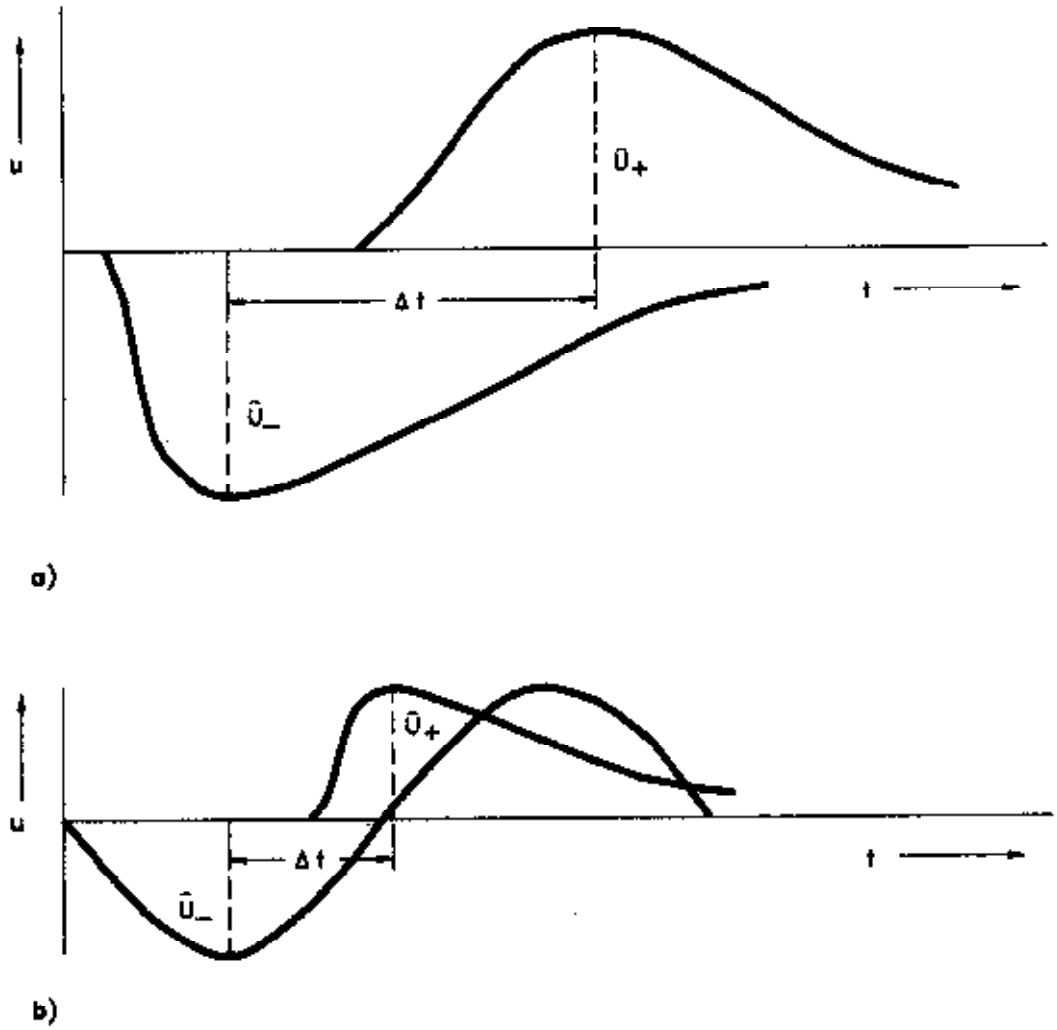

Figure 20 — Definition of time delay Δt.
a) Combination of two impulse voltages.
b) Combination of an impulse voltage and a power frequency alternating voltage.

NATIONAL ANNEX

(*National Foreword*)

Figure 1 given in the main text is to be replaced by the following figure.

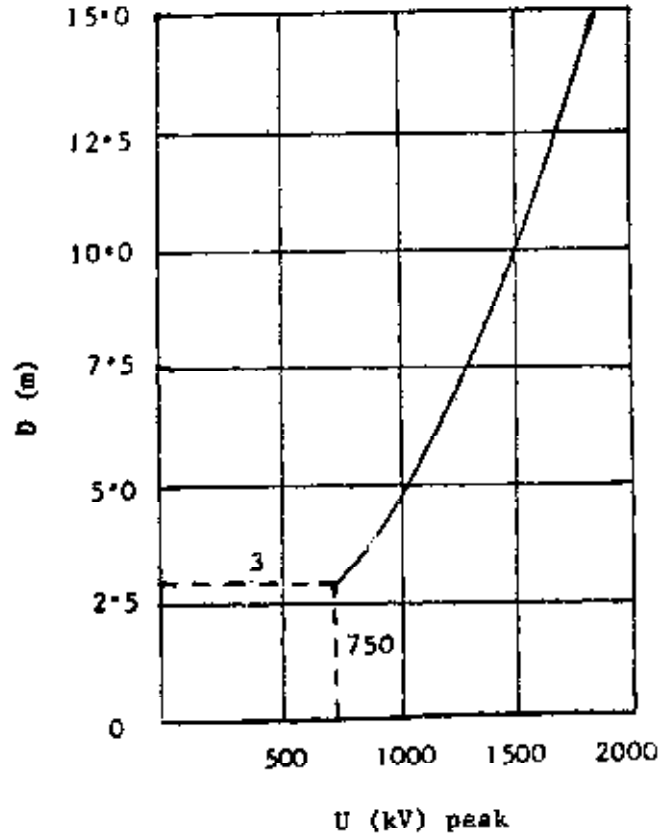

Figure 1 Minimum clearance *D* of extraneous live or grounded objects to the energized electrode of a text object during an ac or positive switching impulse test at the maximum voltage *U* applied during test

Bureau of Indian Standards

BIS is a statutory institution established under the *Bureau of Indian Standards Act, 1986* to promote harmonious development of the activities of standardization, marking and quality certification of goods and attending to connected matters in the country.

Copyright

BIS has the copyright of all its publications. No part of these publications may be reproduced in any form without the prior permission in writing of BIS. This does not preclude the free use, in the course of implementing the standard, of necessary details, such as symbols and sizes, type or grade designations. Enquiries relating to copyright be addressed to the Director (Publications), BIS.

Review of Indian Standards

Amendments are issued to standards as the need arises on the basis of comments. Standards are also reviewed periodically; a standard along with amendments is reaffirmed when such review indicates that no changes are needed; if the review indicates that changes are needed, it is taken up for revision. Users of Indian Standards should ascertain that they are in possession of the latest amendments or edition by referring to the latest issue of 'BIS Handbook' and 'Standards Monthly Additions'.

This Indian Standard has been developed from Doc : No. ETD 19 (3537)

Amendments Issued Since Publication

Amend No.	Date of Issue	Text Affected

BUREAU OF INDIAN STANDARDS

Headquarters:

Manak Bhavan, 9 Bahadur Shah Zafar Marg, New Delhi 110002
Telephones : 323 01 31, 323 83 75, 323 94 02

Telegrams : Manaksanstha
(Common to all offices)

Regional Offices :		Telephone
Central	: Manak Bhavan, 9 Bahadur Shah Zafar Marg NEW DELHI 110002	323 76 17 323 38 41
Eastern	: 1/14 C. I.T. Scheme VII M, V. I. P. Road, Maniktola CALCUTTA 700054	337 84 99, 337 85 61 337 86 26, 337 91 20
Northern	: SCO 335-336, Sector 34-A, CHANDIGARH 160022	60 38 43 60 20 25
Southern	: C. I. T. Campus, IV Cross Road, MADRAS 600113	235 02 16, 235 04 42 235 15 19, 235 23 15
Western	: Manakalaya, E9 MIDC, Marol, Andheri (East) MUMBAI 400093	832 92 95, 832 78 58 832 78 91, 832 78 92

Branches : AHMADABAD. BANGALORE. BHOPAL. BHUBANESHWAR. COIMBATORE. FARIDABAD. GHAZIABAD. GUWAHATI. HYDERABAD. JAIPUR. KANPUR. LUCKNOW. PATNA. THIRUVANANTHAPURAM.

Printed at Dee Kay Printers, New Delhi-110015, India.